X & XB-Series Wiring Guide

NOTE: It is important to observe the manufacturer's guidelines to ensure that the unit is installed correctly and runs properly.

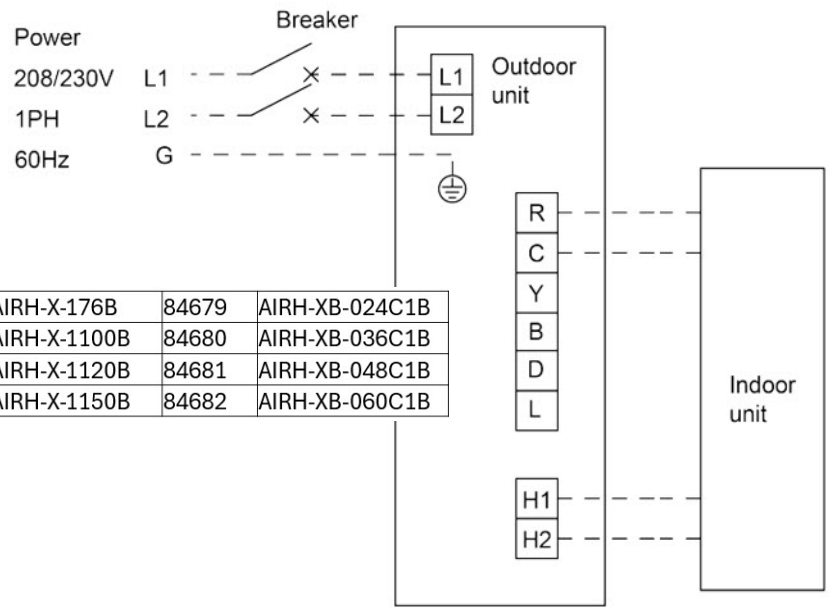

83987	AIRH-X-176B	84679	AIRH-XB-024C1B
83988	AIRH-X-1100B	84680	AIRH-XB-036C1B
83989	AIRH-X-1120B	84681	AIRH-XB-048C1B
83990	AIRH-X-1150B	84682	AIRH-XB-060C1B

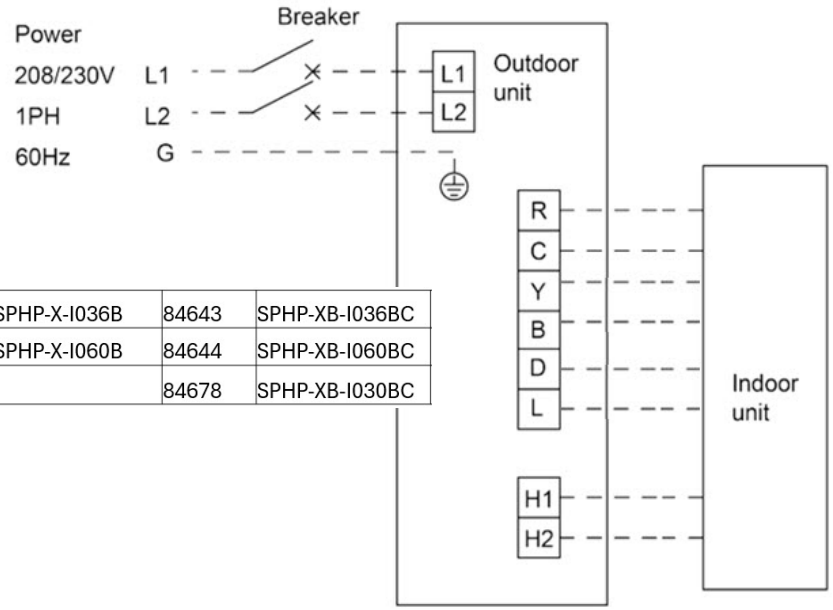

83985	SPHP-X-I036B	84643	SPHP-XB-I036BC
83986	SPHP-X-I060B	84644	SPHP-XB-I060BC
		84678	SPHP-XB-I030BC

SUMMIT

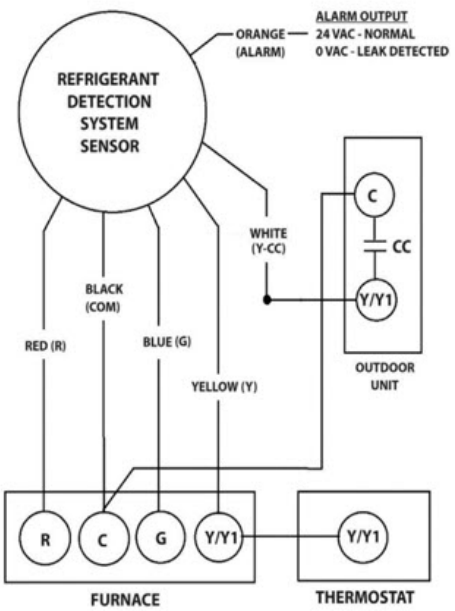

ADP

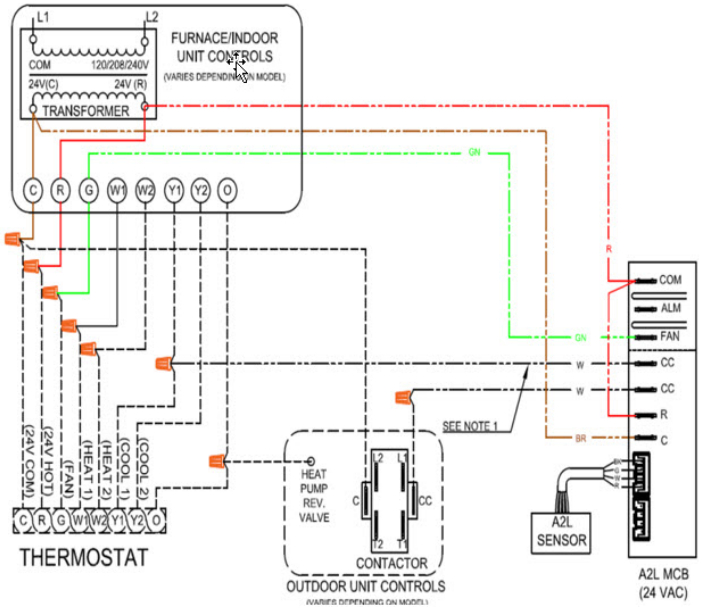
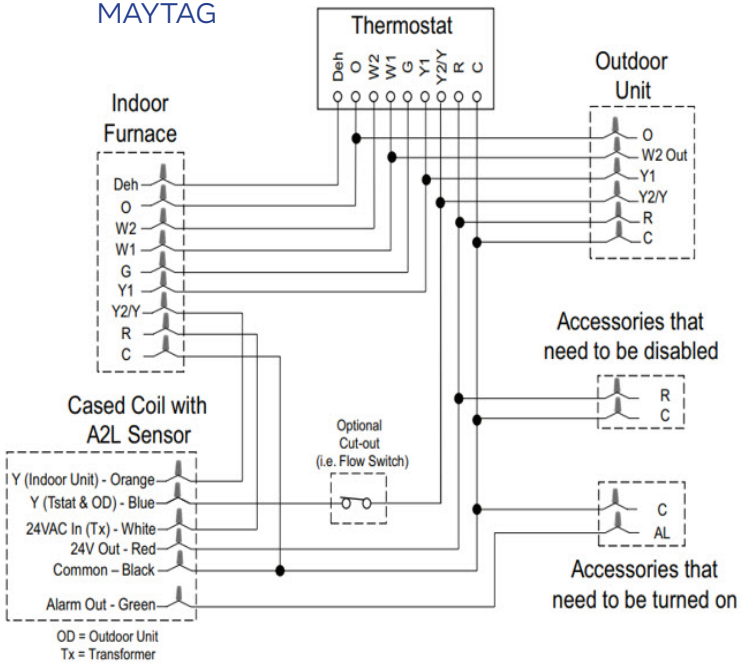
MAYTAG