A972VX
PRODUCT SPECIFICATIONS

TWO STAGE VARIABLE SPEED ULTRA LOW NOX GAS FURNACE

FORM NO. A972VX-100 (04/2018)



CONFIGURATIONS
- Upflow / Horizontal

HEAT EXCHANGER DESIGN
- Heavy gauge aluminized steel tubular heat exchanger
- Secondary heat exchanger condenser coil constructed of aluminum fins fitted to stainless steel tubes.

CABINET DESIGN
- Compact 33" height
- Standardized widths for easy coil fit

AIR DELIVERY SYSTEM
- ECM Variable speed blower motor
- Easily removable slide out blower design

CONTROLS
- Comfort Sync communicating thermostat compatible
- Two stage gas valve
- Self diagnostics saves last 5 fault codes regardless of power interruption

DESCRIPTION
The A972VX model is a 97% AFUE gas furnace used for upflow or horizontal applications only, manufactured with aluminized steel tubular heat exchangers. A972VX units are available in heating capacities of 40,000 to 80,000 Btuh and cooling applications up to 5 tons. Units are approved for installations up 4500 feet above sea level and factory equipped for use with natural gas only. The A972VX is a two-stage gas furnace with high efficiency variable speed blower motor which meets the California Ultra Low Nitrogen Oxides (NOx) Standards (14ng/J) and California Seasonal Efficiency requirements. All units use a redundant gas valve to assure safety shut-off as required by C.S.A. All specifications are subject to change without notice.

VENTING
- Certified for direct vent (2-pipe) and in-direct (1-pipe) applications.

INSTALLATION FEATURES
- Left and right utility connections
- Removable floor base for bottom return air
- All models comply with California's South Coast Air Quality Management district Ultra Low NOx requirements
- Zero step horizontal conversion

WARRANTY
10 year limited parts warranty / lifetime heat exchanger warranty available. See limited warranty document for details.

MODEL NUMBER GUIDE

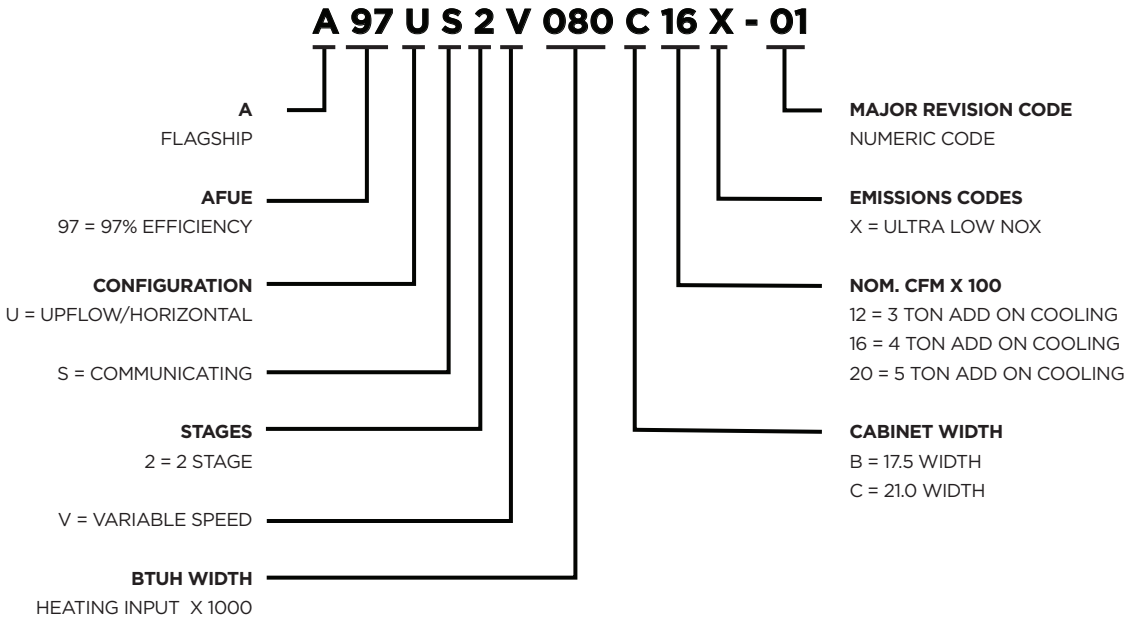

PHYSICAL AND ELECTRICAL DATA

Model	Input (Btuh)	Output (Btuh)	AFUE (ICS)	Nominal Cooling Capacity	Gas Inlet (in.)	Volts/Hz/ Phase	Max. Time Delay Breaker or Fuse	Nomi-nal Full Load Amps	Trans (VA)	Approx Shipping Weight (lbs)
A97US2V040B12X	40,000	39,000	97%	3 Ton	1/2	120-60-1	15	7.7	40	125
A97US2V060B12X	60,000	58,000	97%	3 Ton	1/2	120-60-1	15	7.7	40	130
A97US2V080C16X	80,000	78,000	97%	4 Ton	1/2	120-60-1	15	10.1	40	154
A97US2V080C20X	80,000	78,000	97%	5 Ton	1/2	120-60-1	15	12.8	40	156

Note: For vent length and clearances to combustibles, please reference installation instructions.

BLOWER DATA

A97US2V040B12X BLOWER PERFORMANCE (less filter)

BOTTOM RETURN AIR

0 through 0.8 in. w.g. (Heating) and 0 through 1.0 in. w.g. (Cooling) External Static Pressure Range

HEATING		
[1] Heating Speed DIP Switch Settings	First Stage Heating Speed - cfm	Second Stage Heating Speed - cfm
+24%	1151	1153
+18%	1101	1099
+12%	816	1041
+6%	771	999
Factory Default	704	944
–6%	651	887
–12%	578	826
–18%	542	757

COOLING								
[1] Cooling Speed DIP Switch Settings	First Stage Cooling Speed - cfm				Second Stage Cooling Speed - cfm			
	Low	Medium-Low	Medium-High	[2] High	Low	Medium-Low	Medium-High	[2] High
+	549	732	862	970	907	1072	1233	1373
Factory Default	521	637	760	873	830	975	1117	1268
–	441	560	684	784	736	874	1014	1142

[1] Cooling and heating speeds are based on a combination of DIP switch settings on the furnace control. Refer to Installation Instructions for specific DIP Switch Settings.

[2] Factory default setting.

NOTES - The effect of static pressure is included in air volumes shown.
First stage HEAT is approximately 91% of the same second stage HEAT.
First stage COOL (two-stage air conditioning units only) is approximately 70% of the same second stage COOL speed position.
Continuous Fan Only speed is selectable at 28%, 38%, 70% and 100% of the selected second stage cooling speed - minimum 250 cfm.
Zoning System Applications - Minimum blower speed is 250 cfm.

A97US2V040B12X BLOWER MOTOR WATTS (COOLING)

[1] Cooling Speed DIP Switch Settings		Motor Watts @ Various External Static Pressures - in. wg.																				
		First Stage									Second Stage											
		0	0.1	0.2	0.3	0.4	0.5	0.6	0.7	0.8	0	0.1	0.2	0.3	0.4	0.5	0.6	0.7	0.8	0.9	1.0
+ Setting																						
Cooling Speed	Low	17	30	47	64	78	97	113	130	152	60	80	109	130	158	181	205	231	251	271	288
	Med-low	31	39	60	91	118	136	156	182	199	112	132	158	186	214	237	263	288	315	344	359
	Med-High	65	77	96	126	144	174	191	217	238	176	196	225	257	288	318	344	372	402	432	455
	High	87	104	128	157	178	201	227	250	276	256	277	309	338	373	404	431	465	493	521	531
Factory Default																						
Cooling Speed	Low	23	27	42	57	70	86	108	120	139	45	59	85	108	132	156	179	197	213	241	257
	Med-low	25	35	57	78	101	117	145	155	179	86	95	125	147	175	197	223	252	275	296	320
	Med-High	41	58	82	102	130	145	171	186	206	125	150	175	204	233	260	281	314	340	363	395
	High	65	84	108	133	157	175	198	222	246	201	219	245	277	310	338	364	392	420	451	483
– Setting																						
Cooling Speed	Low	15	23	35	37	65	82	96	117	127	31	42	64	89	111	133	150	169	190	207	230
	Med-low	19	28	46	65	81	99	113	134	152	62	74	99	120	147	170	194	214	238	258	278
	Med-High	25	32	58	86	105	125	144	166	183	86	107	137	159	185	212	236	263	286	308	335
	High	45	59	82	102	131	151	172	197	212	130	160	190	218	246	271	295	321	351	377	404

BLOWER PERFORMANCE DATA - UPFLOW/HORIZONTAL

BLOWER DATA

A97US2V040B12X BLOWER PERFORMANCE (less filter)
SINGLE SIDE RETURN AIR
0 through 0.8 in. w.g. (Heating) and 0 through 1.0 in. w.g. (Cooling) External Static Pressure Range

HEATING		
[1] Heating Speed DIP Switch Settings	First Stage Heating Speed - cfm	Second Stage Heating Speed - cfm
+24%	863	1129
+18%	807	1087
+12%	761	1021
+6%	713	775
Factory Default	716	723
–6%	683	686
–12%	589	599
–18%	562	558

COOLING								
[1] Cooling Speed DIP Switch Settings	First Stage Cooling Speed - cfm				Second Stage Cooling Speed - cfm			
	Low	Medium-Low	Medium-High	[2] High	Low	Medium-Low	Medium-High	[2] High
+	554	705	841	958	868	1057	1217	1344
Factory Default	509	606	724	875	799	969	1109	1253
–	436	559	675	754	703	860	1002	1137

[1] Cooling and heating speeds are based on a combination of DIP switch settings on the furnace control. Refer to Installation Instructions for specific DIP Switch Settings.

[2] Factory default setting.

NOTES - The effect of static pressure is included in air volumes shown.
First stage HEAT is approximately 91% of the same second stage HEAT.
First stage COOL (two-stage air conditioning units only) is approximately 70% of the same second stage COOL speed position.
Continuous Fan Only speed is selectable at 28%, 38%, 70% and 100% of the selected second stage cooling speed - minimum 250 cfm.
Zoning System Applications - Minimum blower speed is 250 cfm.

A97US2V040B12X BLOWER MOTOR WATTS (COOLING)

[1] Cooling Speed DIP Switch Settings		Motor Watts @ Various External Static Pressures - in. wg.																				
		First Stage									Second Stage											
		0	0.1	0.2	0.3	0.4	0.5	0.6	0.7	0.8	0	0.1	0.2	0.3	0.4	0.5	0.6	0.7	0.8	0.9	1.0
+ Setting																						
Cooling Speed	Low	21	32	44	63	81	97	121	136	150	65	85	103	127	154	173	199	220	242	264	287	
	Med-low	30	44	67	90	116	136	158	176	200	122	142	162	188	211	235	264	289	318	341	366	
	Med-High	41	68	94	120	144	166	191	214	234	181	203	232	261	287	316	346	377	408	432	452	
	High	85	105	129	159	173	203	228	248	276	262	281	313	347	374	393	429	463	496	514	534	
Factory Default																						
Cooling Speed	Low	17	24	42	57	72	87	110	124	138	42	57	83	106	128	150	174	200	217	236	260	
	Med-low	25	35	56	74	96	122	138	159	187	84	101	127	149	171	198	220	247	270	292	320	
	Med-High	45	59	74	100	124	152	165	190	207	123	150	187	213	238	257	289	316	338	361	395	
	High	68	85	111	133	154	179	201	227	249	200	222	255	286	314	337	366	396	413	454	476	
– Setting																						
Cooling Speed	Low	18	24	35	48	64	79	95	117	127	35	42	67	83	106	126	151	166	191	201	236	
	Med-low	21	29	45	65	79	95	114	137	159	61	72	99	122	142	166	187	211	230	259	278	
	Med-High	23	32	62	83	105	127	144	167	186	84	105	141	160	188	209	242	259	285	311	328	
	High	45	58	83	100	124	150	168	188	211	132	166	198	217	243	273	303	331	360	374	400	

BLOWER PERFORMANCE DATA - UPFLOW/HORIZONTAL

BLOWER DATA

A97US2V040B12X BLOWER PERFORMANCE (less filter)
SINGLE SIDE RETURN AIR WITH OPTIONAL RETURN AIR BASE
0 through 0.8 in. w.g. (Heating) and 0 through 1.0 in. w.g. (Cooling) External Static Pressure Range

HEATING		
[1] Heating Speed DIP Switch Settings	First Stage Heating Speed - cfm	Second Stage Heating Speed - cfm
+24%	886	905
+18%	825	859
+12%	802	819
+6%	769	770
Factory Default	688	736
–6%	634	678
–12%	635	605
–18%	547	553

COOLING								
[1] Cooling Speed DIP Switch Settings	First Stage Cooling Speed - cfm				Second Stage Cooling Speed - cfm			
	Low	Medium-Low	Medium-High	[2] High	Low	Medium-Low	Medium-High	[2] High
+	542	698	835	947	886	1034	1201	1320
Factory Default	462	634	735	855	808	949	1096	1248
–	413	534	678	779	734	868	987	1130

[1] Cooling and heating speeds are based on a combination of DIP switch settings on the furnace control. Refer to Installation Instructions for specific DIP Switch Settings.

[2] Factory default setting.

NOTES - The effect of static pressure is included in air volumes shown.
First stage HEAT is approximately 91% of the same second stage HEAT.
First stage COOL (two-stage air conditioning units only) is approximately 70% of the same second stage COOL speed position.
Continuous Fan Only speed is selectable at 28%, 38%, 70% and 100% of the selected second stage cooling speed - minimum 250 cfm.
Zoning System Applications - Minimum blower speed is 250 cfm.

A97US2V040B12X BLOWER MOTOR WATTS (COOLING)

[1] Cooling Speed DIP Switch Settings		Motor Watts @ Various External Static Pressures - in. wg.																				
		First Stage									Second Stage											
		0	0.1	0.2	0.3	0.4	0.5	0.6	0.7	0.8	0	0.1	0.2	0.3	0.4	0.5	0.6	0.7	0.8	0.9	1.0
+ Setting																						
Cooling Speed	Low	20	29	49	62	84	94	108	129	144	61	75	98	126	150	177	197	219	241	268	284	
	Med-low	35	42	65	87	110	134	152	174	195	102	126	153	174	204	229	255	284	305	333	357	
	Med-High	45	67	94	115	135	165	184	204	231	177	196	218	256	281	307	338	364	396	414	442	
	High	87	95	121	146	166	201	220	244	269	235	260	288	324	357	381	406	439	474	502	529	
Factory Default																						
Cooling Speed	Low	18	24	39	53	70	85	104	123	145	44	52	81	104	123	146	169	192	210	234	255	
	Med-low	26	33	51	72	88	114	137	155	174	81	91	114	142	167	190	215	240	264	289	310	
	Med-High	34	50	75	92	116	140	163	182	204	129	143	167	190	220	243	277	298	322	360	388	
	High	60	77	94	122	145	170	193	216	235	188	205	234	264	288	318	351	377	405	437	466	
– Setting																						
Cooling Speed	Low	14	21	35	48	63	84	92	109	128	25	35	64	88	109	136	150	176	194	216	234	
	Med-low	20	30	42	59	77	100	126	139	150	46	64	84	113	136	166	187	206	229	252	271	
	Med-High	22	32	49	85	99	124	142	164	187	88	101	131	152	183	204	225	256	278	304	331	
	High	45	62	70	106	122	150	167	196	218	138	155	177	204	232	264	284	317	342	366	389	

BLOWER PERFORMANCE DATA - UPFLOW/HORIZONTAL

BLOWER DATA

A97US2V060B12X BLOWER PERFORMANCE (less filter)
BOTTOM RETURN AIR
0 through 0.8 in. w.g. (Heating) and 0 through 1.0 in. w.g. (Cooling) External Static Pressure Range

HEATING		
[1] Heating Speed DIP Switch Settings	First Stage Heating Speed - cfm	Second Stage Heating Speed - cfm
+24%	1106	1234
+18%	1047	1158
+12%	989	1110
+6%	940	1054
Factory Default	886	999
–6%	837	947
–12%	780	882
–18%	722	826

COOLING								
[1] Cooling Speed DIP Switch Settings	First Stage Cooling Speed - cfm				Second Stage Cooling Speed - cfm			
	Low	Medium-Low	Medium-High	[2] High	Low	Medium-Low	Medium-High	[2] High
+	611	739	843	949	879	1046	1212	1380
Factory Default	554	681	783	883	816	952	1107	1254
–	486	630	712	802	739	876	1006	1132

[1] Cooling and heating speeds are based on a combination of DIP switch settings on the furnace control. Refer to Installation Instructions for specific DIP Switch Settings.

[2] Factory default setting.

NOTES - The effect of static pressure is included in air volumes shown.
First stage HEAT is approximately 91% of the same second stage HEAT.
First stage COOL (two-stage air conditioning units only) is approximately 70% of the same second stage COOL speed position.
Continuous Fan Only speed is selectable at 28%, 38%, 70% and 100% of the selected second stage cooling speed - minimum 250 cfm.
Zoning System Applications - Minimum blower speed is 250 cfm.

A97US2V060B12X BLOWER MOTOR WATTS (COOLING)

[1] Cooling Speed DIP Switch Settings		Motor Watts @ Various External Static Pressures - in. wg.																				
		First Stage									Second Stage											
		0	0.1	0.2	0.3	0.4	0.5	0.6	0.7	0.8	0	0.1	0.2	0.3	0.4	0.5	0.6	0.7	0.8	0.9	1.0
+ Setting																						
Cooling Speed	Low	32	44	59	77	94	109	126	142	157	71	86	110	132	158	179	204	225	238	258	277
	Med-low	45	62	79	97	123	138	156	177	193	126	142	166	189	211	236	263	293	317	335	358
	Med-High	67	81	103	124	150	174	192	206	231	182	202	232	259	288	316	343	372	405	430	459
	High	88	107	135	154	183	201	229	254	273	269	293	328	364	386	420	444	481	511	530	521
Factory Default																						
Cooling Speed	Low	26	37	56	67	82	94	113	129	148	70	87	97	119	144	166	177	203	213	229	251
	Med-low	33	45	71	88	112	131	142	158	173	100	112	134	154	179	208	233	253	279	293	306
	Med-High	43	67	87	113	135	148	171	188	207	134	157	188	216	239	268	299	321	349	374	397
	High	78	96	117	137	156	184	209	222	250	203	229	256	284	317	346	370	404	433	466	491
– Setting																						
Cooling Speed	Low	19	29	44	56	74	86	100	118	130	35	54	79	95	118	143	154	168	190	205	221
	Med-low	33	45	59	77	95	111	130	143	163	68	83	108	128	149	171	197	217	236	255	270
	Med-High	40	50	73	92	115	132	145	164	178	98	115	143	165	192	214	242	266	289	310	329
	High	49	66	94	113	133	156	171	196	207	145	164	194	222	247	275	305	332	352	380	411

BLOWER PERFORMANCE DATA - UPFLOW/HORIZONTAL

BLOWER DATA

A97US2V060B12X BLOWER PERFORMANCE (less filter)
SINGLE SIDE RETURN AIR
0 through 0.8 in. w.g. (Heating) and 0 through 1.0 in. w.g. (Cooling) External Static Pressure Range

HEATING		
[1] Heating Speed DIP Switch Settings	First Stage Heating Speed - cfm	Second Stage Heating Speed - cfm
+24%	1114	1237
+18%	1063	1168
+12%	1010	1106
+6%	951	1064
Factory Default	892	1003
–6%	837	942
–12%	761	869
–18%	693	809

COOLING								
[1] Cooling Speed DIP Switch Settings	First Stage Cooling Speed - cfm				Second Stage Cooling Speed - cfm			
	Low	Medium-Low	Medium-High	[2] High	Low	Medium-Low	Medium-High	[2] High
+	599	749	867	981	892	1057	1229	1404
Factory Default	549	656	754	866	775	958	1115	1279
–	475	609	680	773	708	854	1011	1147

[1] Cooling and heating speeds are based on a combination of DIP switch settings on the furnace control. Refer to Installation Instructions for specific DIP Switch Settings.

[2] Factory default setting.

NOTES - The effect of static pressure is included in air volumes shown.
First stage HEAT is approximately 91% of the same second stage HEAT.
First stage COOL (two-stage air conditioning units only) is approximately 70% of the same second stage COOL speed position.
Continuous Fan Only speed is selectable at 28%, 38%, 70% and 100% of the selected second stage cooling speed - minimum 250 cfm.
Zoning System Applications - Minimum blower speed is 250 cfm.

A97US2V060B12X BLOWER MOTOR WATTS (COOLING)

[1] Cooling Speed DIP Switch Settings		Motor Watts @ Various External Static Pressures - in. wg.																				
		First Stage									Second Stage											
		0	0.1	0.2	0.3	0.4	0.5	0.6	0.7	0.8	0	0.1	0.2	0.3	0.4	0.5	0.6	0.7	0.8	0.9	1.0
+ Setting																						
Cooling Speed	Low	33	42	60	75	92	107	124	144	164	88	97	116	142	158	186	203	226	245	265	284	
	Med-low	46	62	84	104	124	141	160	180	197	126	149	176	199	221	253	274	295	324	345	368	
	Med-High	71	88	107	131	151	177	196	211	227	204	226	251	279	306	333	358	382	413	448	471	
	High	101	119	142	169	189	214	242	262	271	311	333	366	396	421	458	481	511	527	528	498	
Factory Default																						
Cooling Speed	Low	27	34	54	67	79	91	108	132	142	56	74	97	118	138	155	173	198	212	232	246	
	Med-low	34	42	66	88	104	122	133	154	172	101	118	142	164	187	209	234	254	271	295	316	
	Med-High	60	70	86	108	126	147	169	185	201	155	178	201	230	251	282	307	330	352	377	400	
	High	79	95	117	136	161	184	200	218	238	234	259	291	313	340	366	399	427	449	480	485	
– Setting																						
Cooling Speed	Low	19	28	42	55	69	84	98	115	130	34	55	76	94	117	132	152	167	185	203	223	
	Med-low	27	41	60	74	89	106	124	144	162	73	87	108	134	159	176	196	209	238	251	273	
	Med-High	32	45	70	92	107	127	146	163	178	102	128	153	173	202	223	250	275	293	313	335	
	High	59	70	87	112	134	150	170	189	203	161	188	212	242	266	283	313	347	367	395	409	

BLOWER PERFORMANCE DATA - UPFLOW/HORIZONTAL

BLOWER DATA

A97US2V060B12X BLOWER PERFORMANCE (less filter)
SINGLE SIDE RETURN AIR WITH OPTIONAL RETURN AIR BASE
0 through 0.8 in. w.g. (Heating) and 0 through 1.0 in. w.g. (Cooling) External Static Pressure Range

HEATING		
[1] Heating Speed DIP Switch Settings	First Stage Heating Speed - cfm	Second Stage Heating Speed - cfm
+24%	1098	1229
+18%	1039	1168
+12%	992	1104
+6%	930	1051
Factory Default	885	996
–6%	822	937
–12%	773	878
–18%	717	817

COOLING								
[1] Cooling Speed DIP Switch Settings	First Stage Cooling Speed - cfm				Second Stage Cooling Speed - cfm			
	Low	Medium-Low	Medium-High	[2] High	Low	Medium-Low	Medium-High	[2] High
+	578	746	847	957	889	1042	1197	1364
Factory Default	556	665	764	864	799	949	1093	1249
–	485	593	706	783	721	845	988	1122

[1] Cooling and heating speeds are based on a combination of DIP switch settings on the furnace control. Refer to Installation Instructions for specific DIP Switch Settings.

[2] Factory default setting.

NOTES - The effect of static pressure is included in air volumes shown.
First stage HEAT is approximately 91% of the same second stage HEAT.
First stage COOL (two-stage air conditioning units only) is approximately 70% of the same second stage COOL speed position.
Continuous Fan Only speed is selectable at 28%, 38%, 70% and 100% of the selected second stage cooling speed - minimum 250 cfm.
Zoning System Applications - Minimum blower speed is 250 cfm.

A97US2V060B12X BLOWER MOTOR WATTS (COOLING)

[1] Cooling Speed DIP Switch Settings		Motor Watts @ Various External Static Pressures - in. wg.																				
		First Stage									Second Stage											
		0	0.1	0.2	0.3	0.4	0.5	0.6	0.7	0.8	0	0.1	0.2	0.3	0.4	0.5	0.6	0.7	0.8	0.9	1.0
+ Setting																						
Cooling Speed	Low	32	44	59	70	94	109	128	143	167	70	82	105	127	149	170	195	215	237	256	274
	Med-low	43	59	80	103	115	140	160	174	195	111	134	160	181	206	230	252	278	301	325	353
	Med-High	61	73	100	125	145	168	185	208	222	170	193	222	246	273	301	328	355	384	407	439
	High	89	114	138	160	181	203	227	248	263	262	291	315	349	373	401	430	461	490	517	535
Factory Default																						
Cooling Speed	Low	22	32	47	62	78	93	111	123	142	58	70	88	106	132	148	168	189	209	230	247
	Med-low	30	40	57	80	99	117	135	155	169	99	108	123	147	172	191	220	239	256	282	305
	Med-High	44	58	77	99	120	141	158	177	202	135	151	177	202	224	251	278	299	319	348	375
	High	62	88	101	123	145	168	192	210	230	207	224	251	282	302	327	361	384	409	435	461
– Setting																						
Cooling Speed	Low	20	28	44	59	69	86	98	114	132	33	45	68	89	109	129	145	165	183	202	218
	Med-low	31	44	60	76	94	112	127	144	157	69	81	100	121	141	164	185	207	227	247	265
	Med-High	48	57	73	95	107	127	146	167	186	99	113	136	162	184	207	233	251	279	300	322
	High	52	65	97	118	132	151	175	189	209	132	164	189	213	243	266	289	318	339	367	385

BLOWER DATA

A97US2V080C16X BLOWER PERFORMANCE (less filter)
BOTTOM RETURN AIR
0 through 0.8 in. w.g. (Heating) and 0 through 1.0 in. w.g. (Cooling) External Static Pressure Range

HEATING		
[1] Heating Speed DIP Switch Settings	First Stage Heating Speed - cfm	Second Stage Heating Speed - cfm
+24%	1499	1640
+18%	1427	1546
+12%	1361	1472
+6%	1294	1399
Factory Default	1219	1315
–6%	1176	1242
–12%	1090	1173
–18%	1007	1077

COOLING								
[1] Cooling Speed DIP Switch Settings	First Stage Cooling Speed - cfm				Second Stage Cooling Speed - cfm			
	Low	Medium-Low	Medium-High	[2] High	Low	Medium-Low	Medium-High	[2] High
+	797	954	1071	1241	1102	1304	1508	1713
Factory Default	713	873	969	1147	1006	1186	1392	1588
–	623	767	880	1025	911	1068	1252	1422

[1] Cooling and heating speeds are based on a combination of DIP switch settings on the furnace control. Refer to Installation Instructions for specific DIP Switch Settings.

[2] Factory default setting.

NOTES - The effect of static pressure is included in air volumes shown.
First stage HEAT is approximately 91% of the same second stage HEAT.
First stage COOL (two-stage air conditioning units only) is approximately 70% of the same second stage COOL speed position.
Continuous Fan Only speed is selectable at 28%, 38%, 70% and 100% of the selected second stage cooling speed - minimum 380 cfm.
Zoning System Applications - Minimum blower speed is 380 cfm.

A97US2V080C16X BLOWER MOTOR WATTS (COOLING)

[1] Cooling Speed DIP Switch Settings		Motor Watts @ Various External Static Pressures - in. wg.																				
		First Stage									Second Stage											
		0	0.1	0.2	0.3	0.4	0.5	0.6	0.7	0.8	0	0.1	0.2	0.3	0.4	0.5	0.6	0.7	0.8	0.9	1.0
+ Setting																						
Cooling Speed	Low	45	57	78	103	121	145	167	184	205	97	116	144	167	200	228	255	276	302	325	352	
	Med-low	70	83	107	132	155	184	208	228	253	160	174	202	233	265	296	328	357	382	414	443	
	Med-High	88	105	135	160	191	215	241	268	297	226	251	286	323	358	387	423	461	494	527	554	
	High	133	154	179	209	240	271	299	327	357	321	357	397	434	474	505	547	587	630	668	711	
Factory Default																						
Cooling Speed	Low	28	43	65	92	114	134	153	174	192	77	97	129	152	178	203	224	255	279	298	325	
	Med-low	46	69	94	117	138	161	187	210	230	123	148	179	205	236	267	289	318	348	367	399	
	Med-High	70	88	116	140	165	192	211	242	260	182	204	242	266	297	336	363	396	430	450	481	
	High	106	129	156	184	213	243	264	288	313	275	305	344	377	408	443	478	519	550	585	612	
– Setting																						
Cooling Speed	Low	25	41	58	78	95	113	126	144	165	62	75	97	128	151	172	197	213	235	263	281	
	Med-low	44	57	74	98	122	141	162	185	204	83	109	137	162	194	215	242	271	291	318	335	
	Med-High	58	71	95	121	143	168	195	214	233	141	162	190	222	255	288	313	341	360	401	423	
	High	72	94	122	149	173	201	225	249	274	200	223	258	290	324	358	387	426	453	477	506	

BLOWER PERFORMANCE DATA - UPFLOW/HORIZONTAL

BLOWER DATA

A97US2V080C16X BLOWER PERFORMANCE (less filter)
SINGLE SIDE RETURN AIR
0 through 0.8 in. w.g. (Heating) and 0 through 1.0 in. w.g. (Cooling) External Static Pressure Range

HEATING		
[1] Heating Speed DIP Switch Settings	First Stage Heating Speed - cfm	Second Stage Heating Speed - cfm
+24%	1433	1542
+18%	1353	1480
+12%	1275	1398
+6%	1229	1334
Factory Default	1154	1253
–6%	1093	1181
–12%	1024	1107
–18%	958	1054

COOLING								
[1] Cooling Speed DIP Switch Settings	First Stage Cooling Speed - cfm				Second Stage Cooling Speed - cfm			
	Low	Medium-Low	Medium-High	[2] High	Low	Medium-Low	Medium-High	[2] High
+	792	959	1118	1264	1104	1302	1530	1730
Factory Default	844	876	1008	1162	1001	1202	1397	1612
–	643	771	908	1055	915	1090	1253	1443

[1] Cooling and heating speeds are based on a combination of DIP switch settings on the furnace control. Refer to Installation Instructions for specific DIP Switch Settings.

[2] Factory default setting.

NOTES - The effect of static pressure is included in air volumes shown.
First stage HEAT is approximately 91% of the same second stage HEAT.
First stage COOL (two-stage air conditioning units only) is approximately 70% of the same second stage COOL speed position.
Continuous Fan Only speed is selectable at 28%, 38%, 70% and 100% of the selected second stage cooling speed - minimum 380 cfm.
Zoning System Applications - Minimum blower speed is 380 cfm.

A97US2V080C16X BLOWER MOTOR WATTS (COOLING)

[1] Cooling Speed DIP Switch Settings		Motor Watts @ Various External Static Pressures - in. wg.																				
		First Stage									Second Stage											
		0	0.1	0.2	0.3	0.4	0.5	0.6	0.7	0.8	0	0.1	0.2	0.3	0.4	0.5	0.6	0.7	0.8	0.9	1.0
+ Setting																						
Cooling Speed	Low	50	64	92	116	135	155	184	202	216	123	156	180	207	237	266	289	316	344	371	392
	Med-low	88	106	128	153	178	201	231	254	272	206	225	258	290	318	351	379	416	445	474	498
	Med-High	119	139	171	196	221	251	276	305	326	304	330	369	407	446	482	511	540	588	615	653
	High	183	201	231	260	287	320	349	379	409	423	464	503	544	587	631	661	703	736	781	783
Factory Default																						
Cooling Speed	Low	62	74	105	126	151	170	197	216	238	91	118	143	167	196	220	247	271	295	318	341
	Med-low	68	79	102	127	150	175	201	220	244	146	178	213	241	268	292	323	360	384	409	433
	Med-High	88	108	137	160	188	217	242	261	288	234	259	295	329	364	394	424	458	490	518	558
	High	129	157	184	214	239	265	295	317	349	333	368	407	448	493	529	561	598	631	668	704
– Setting																						
Cooling Speed	Low	42	58	72	90	111	128	146	168	180	75	95	116	141	166	190	215	237	260	280	304
	Med-low	52	70	88	113	140	162	182	203	221	121	139	164	194	219	245	275	303	326	353	379
	Med-High	73	95	116	143	172	190	215	237	259	169	191	228	259	288	320	345	377	408	434	467
	High	101	119	146	172	199	222	249	276	300	239	267	309	350	379	421	441	474	509	545	575

BLOWER PERFORMANCE DATA - UPFLOW/HORIZONTAL

BLOWER DATA

A97US2V080C16X BLOWER PERFORMANCE (less filter)
SINGLE SIDE RETURN AIR WITH OPTIONAL RETURN AIR BASE
0 through 0.8 in. w.g. (Heating) and 0 through 1.0 in. w.g. (Cooling) External Static Pressure Range

HEATING		
[1] Heating Speed DIP Switch Settings	First Stage Heating Speed - cfm	Second Stage Heating Speed - cfm
+24%	1,407	1,528
+18%	1,342	1,461
+12%	1,283	1,388
+6%	1,217	1,304
Factory Default	1,152	1,237
–6%	1,080	1,150
–12%	1,015	1,114
–18%	953	1,038

COOLING								
[1] Cooling Speed DIP Switch Settings	First Stage Cooling Speed - cfm				Second Stage Cooling Speed - cfm			
	Low	Medium-Low	Medium-High	[2] High	Low	Medium-Low	Medium-High	[2] High
+	831	969	1103	1269	1096	1323	1541	1731
Factory Default	753	905	1008	1150	1005	1208	1385	1605
–	806	807	932	1045	920	1102	1269	1451

[1] Cooling and heating speeds are based on a combination of DIP switch settings on the furnace control. Refer to Installation Instructions for specific DIP Switch Settings.

[2] Factory default setting.

NOTES - The effect of static pressure is included in air volumes shown.
First stage HEAT is approximately 91% of the same second stage HEAT.
First stage COOL (two-stage air conditioning units only) is approximately 70% of the same second stage COOL speed position.
Continuous Fan Only speed is selectable at 28%, 38%, 70% and 100% of the selected second stage cooling speed - minimum 250 cfm.
Zoning System Applications - Minimum blower speed is 250 cfm.

A97US2V080C16X BLOWER MOTOR WATTS (COOLING)

[1] Cooling Speed DIP Switch Settings		Motor Watts @ Various External Static Pressures - in. wg.																				
		First Stage									Second Stage											
		0	0.1	0.2	0.3	0.4	0.5	0.6	0.7	0.8	0	0.1	0.2	0.3	0.4	0.5	0.6	0.7	0.8	0.9	1.0
+ Setting																						
Cooling Speed	Low	45	62	89	112	135	156	176	200	220	103	135	164	190	212	247	270	298	325	350	376
	Med-low	77	90	116	144	171	194	217	240	264	191	207	239	275	311	337	368	394	429	461	484
	Med-High	116	129	154	181	208	235	263	289	314	285	303	343	377	416	454	489	523	556	585	621
	High	153	177	204	238	264	297	329	356	387	399	430	468	508	554	589	639	677	709	752	779
Factory Default																						
Cooling Speed	Low	41	54	78	103	121	143	163	185	207	102	113	132	156	184	211	240	259	286	313	334
	Med-low	56	78	106	132	151	177	201	221	244	134	164	191	224	253	282	312	340	368	397	425
	Med-High	91	106	135	163	185	211	235	260	284	219	242	272	305	341	379	407	435	462	498	529
	High	131	150	176	206	234	262	288	316	341	305	338	377	419	454	493	531	565	603	629	664
– Setting																						
Cooling Speed	Low	49	63	86	106	130	156	175	194	217	68	84	111	135	160	186	210	230	254	280	298
	Med-low	35	56	82	104	131	151	170	191	212	112	133	161	189	215	240	267	296	318	347	370
	Med-High	66	77	109	132	153	178	201	226	250	164	187	221	249	284	309	333	368	396	428	456
	High	101	112	138	165	192	215	243	268	293	223	256	298	327	365	402	434	469	500	526	565

BLOWER PERFORMANCE DATA - UPFLOW/HORIZONTAL

BLOWER DATA

A97US2V080C20X BLOWER PERFORMANCE (less filter)

BOTTOM RETURN AIR

0 through 0.8 in. w.g. (Heating) and 0 through 1.0 in. w.g. (Cooling) External Static Pressure Range

HEATING		
[1] Heating Speed DIP Switch Settings	First Stage Heating Speed - cfm	Second Stage Heating Speed - cfm
+24%	1591	2135
+18%	1503	2026
+12%	1426	1921
+6%	1334	1828
Factory Default	1277	1716
–6%	1197	1609
–12%	1124	1504
–18%	1037	1402

COOLING								
[1] Cooling Speed DIP Switch Settings	First Stage Cooling Speed - cfm				Second Stage Cooling Speed - cfm			
	Low	Medium-Low	Medium-High	[2] High	Low	Medium-Low	Medium-High	[2] High
+	1094	1253	1388	1580	1584	1825	2065	2286
Factory Default	984	1155	1284	1445	1454	1659	1881	2092
–	868	1021	1152	1302	1301	1490	1693	1890

[1] Cooling and heating speeds are based on a combination of DIP switch settings on the furnace control. Refer to Installation Instructions for specific DIP Switch Settings.

[2] Factory default setting.

NOTES - The effect of static pressure is included in air volumes shown.
First stage HEAT is approximately 91% of the same second stage HEAT.
First stage COOL (two-stage air conditioning units only) is approximately 70% of the same second stage COOL speed position.
Continuous Fan Only speed is selectable at 28%, 38%, 70% and 100% of the selected second stage cooling speed - minimum 450 cfm.
Zoning System Applications - Minimum blower speed is 450 cfm.

A97US2V080C20X BLOWER MOTOR WATTS (COOLING)

[1] Cooling Speed DIP Switch Settings		Motor Watts @ Various External Static Pressures - in. wg.																				
		First Stage									Second Stage											
		0	0.1	0.2	0.3	0.4	0.5	0.6	0.7	0.8	0	0.1	0.2	0.3	0.4	0.5	0.6	0.7	0.8	0.9	1.0
+ Setting																						
Cooling Speed	Low	91	110	140	169	202	226	252	277	305	244	279	315	358	393	431	472	515	552	584	613
	Med-low	131	153	184	218	254	281	312	337	367	394	426	469	511	561	586	639	677	737	768	824
	Med-High	182	202	232	267	304	341	378	412	442	523	588	636	693	756	793	843	903	947	995	1040
	High	243	270	316	355	393	426	473	511	549	800	848	894	949	1007	1052	1061	1057	1057	1047	1046
Factory Default																						
Cooling Speed	Low	70	85	115	143	166	196	219	245	270	186	219	256	286	325	361	398	435	460	495	523
	Med-low	112	128	152	180	215	240	267	299	323	271	308	353	382	431	474	515	558	604	639	671
	Med-High	132	159	189	224	259	291	317	348	378	402	442	482	543	584	623	677	717	760	813	868
	High	189	213	253	291	327	366	403	429	470	600	633	678	729	776	825	880	923	973	1015	1046
– Setting																						
Cooling Speed	Low	61	79	99	115	141	169	196	214	242	155	181	213	243	272	312	338	371	395	423	460
	Med-low	83	102	132	155	183	208	237	262	291	215	241	270	307	345	383	424	461	488	520	559
	Med-High	111	131	158	191	222	245	278	302	336	299	332	374	409	447	493	526	576	614	654	692
	High	146	175	203	237	271	310	336	365	390	423	468	506	545	603	635	681	734	775	821	866

BLOWER PERFORMANCE DATA - UPFLOW/HORIZONTAL

BLOWER DATA

A97US2V080C20X BLOWER PERFORMANCE (less filter)

SINGLE SIDE RETURN AIR - Air volumes in **bold** require Optional Return Air Base and field fabricated transition to accommodate 20 x 25 x 1 in. cleanable air filter in order to maintain proper air velocity across the filter.

0 through 0.8 in. w.g. (Heating) and 0 through 1.0 in. w.g. (Cooling) External Static Pressure Range

HEATING		
[1] Heating Speed DIP Switch Settings	First Stage Heating Speed - cfm	Second Stage Heating Speed - cfm
+24%	1491	**2027**
+18%	1414	**1901**
+12%	1351	1801
+6%	1284	1722
Factory Default	1211	1621
–6%	1130	1517
–12%	1048	1407
–18%	993	1323

COOLING								
[1] Cooling Speed DIP Switch Settings	First Stage Cooling Speed - cfm				Second Stage Cooling Speed - cfm			
	Low	Medium-Low	Medium-High	[2] High	Low	Medium-Low	Medium-High	[2] High
+	1094	1279	1430	1609	1599	1823	**2051**	**2239**
Factory Default	1003	1160	1308	1454	1438	1649	1863	**2097**
–	894	1044	1166	1309	1301	1490	1683	1897

[1] Cooling and heating speeds are based on a combination of DIP switch settings on the furnace control. Refer to Installation Instructions for specific DIP Switch Settings.

[2] Factory default setting.

NOTES - The effect of static pressure is included in air volumes shown.
First stage HEAT is approximately 91% of the same second stage HEAT.
First stage COOL (two-stage air conditioning units only) is approximately 70% of the same second stage COOL speed position.
Continuous Fan Only speed is selectable at 28%, 38%, 70% and 100% of the selected second stage cooling speed - minimum 450 cfm.
Zoning System Applications - Minimum blower speed is 450 cfm.

A97US2V080C20X BLOWER MOTOR WATTS (COOLING)

[1] Cooling Speed DIP Switch Settings		Motor Watts @ Various External Static Pressures - in. wg.																			
		First Stage									Second Stage										
		0	0.1	0.2	0.3	0.4	0.5	0.6	0.7	0.8	0	0.1	0.2	0.3	0.4	0.5	0.6	0.7	0.8	0.9	1.0
+ Setting																					
Cooling Speed	Low	77	106	146	182	206	233	266	294	327	241	286	338	374	416	467	504	546	583	622	657
	Med-low	126	163	194	230	273	301	333	369	399	394	430	488	532	577	631	669	726	775	814	851
	Med-High	189	213	257	291	334	367	412	439	471	582	627	669	726	776	843	900	950	1005	1034	1035
	High	271	300	341	382	431	475	519	558	594	812	871	941	991	1049	1054	1044	1040	1034	1026	1022
Factory Default																					
Cooling Speed	Low	62	86	120	151	178	207	234	262	295	201	229	264	304	343	389	419	458	488	519	561
	Med-low	103	132	160	199	226	258	293	322	350	289	327	374	420	466	509	561	603	633	667	716
	Med-High	146	172	208	251	287	314	346	382	408	442	481	526	578	628	687	719	776	832	863	908
	High	196	223	269	305	349	386	420	452	491	612	663	721	792	843	908	957	1002	1038	1055	1047
– Setting																					
Cooling Speed	Low	55	77	102	121	148	175	200	229	258	143	170	212	245	285	309	345	381	416	450	477
	Med-low	71	99	129	159	189	219	249	275	303	206	245	286	330	377	414	453	483	516	551	591
	Med-High	91	122	160	193	227	259	286	318	350	299	347	400	442	485	532	573	624	659	692	728
	High	135	165	205	245	285	317	345	381	412	435	488	538	596	643	688	743	799	838	881	919

DIMENSIONS

	Model	A		B		C	
		IN.	MM.	IN.	MM.	IN.	MM.
UPFLOW HORIZONTAL	A97US2V040B12X	17-1/2	446	16-3/8	416	16	406
	A97US2V060B12X						
	A97US2V080C16X	21	533	19-7/8	505	19-1/2	495
	A97US2V080C20X						

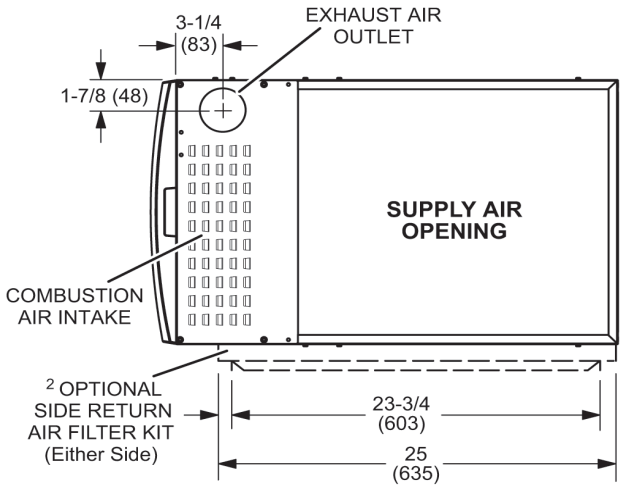

TOP VIEW

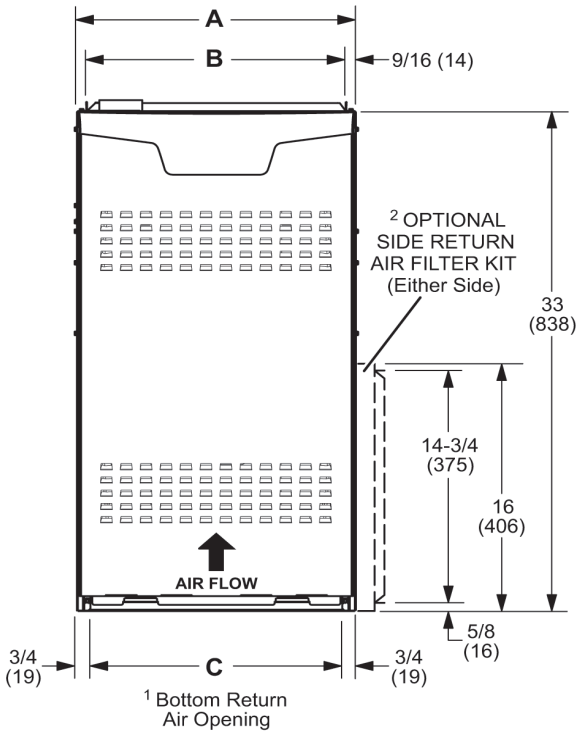

FRONT VIEW

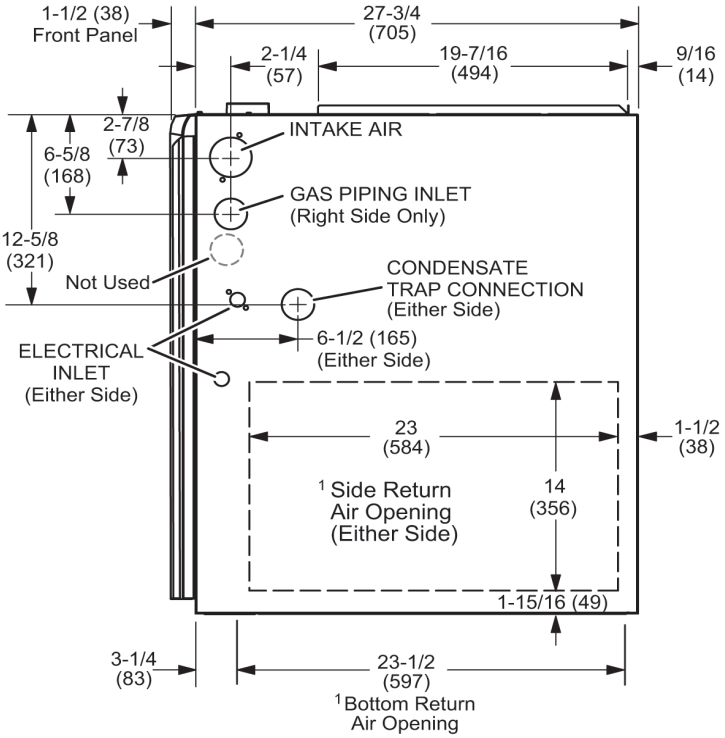

SIDE VIEW

DIMENSIONS

	Model	A		B		C	
		IN.	MM.	IN.	MM.	IN.	MM.
UPFLOW HORIZONTAL	A97US2V040B12X	17-1/2	446	16-3/8	416	16	406
	A97US2V060B12X						
	A97US2V080C16X	21	533	19-7/8	505	19-1/2	495
	A97US2V080C20X						

LEFT-HAND AIR DISCHARGE

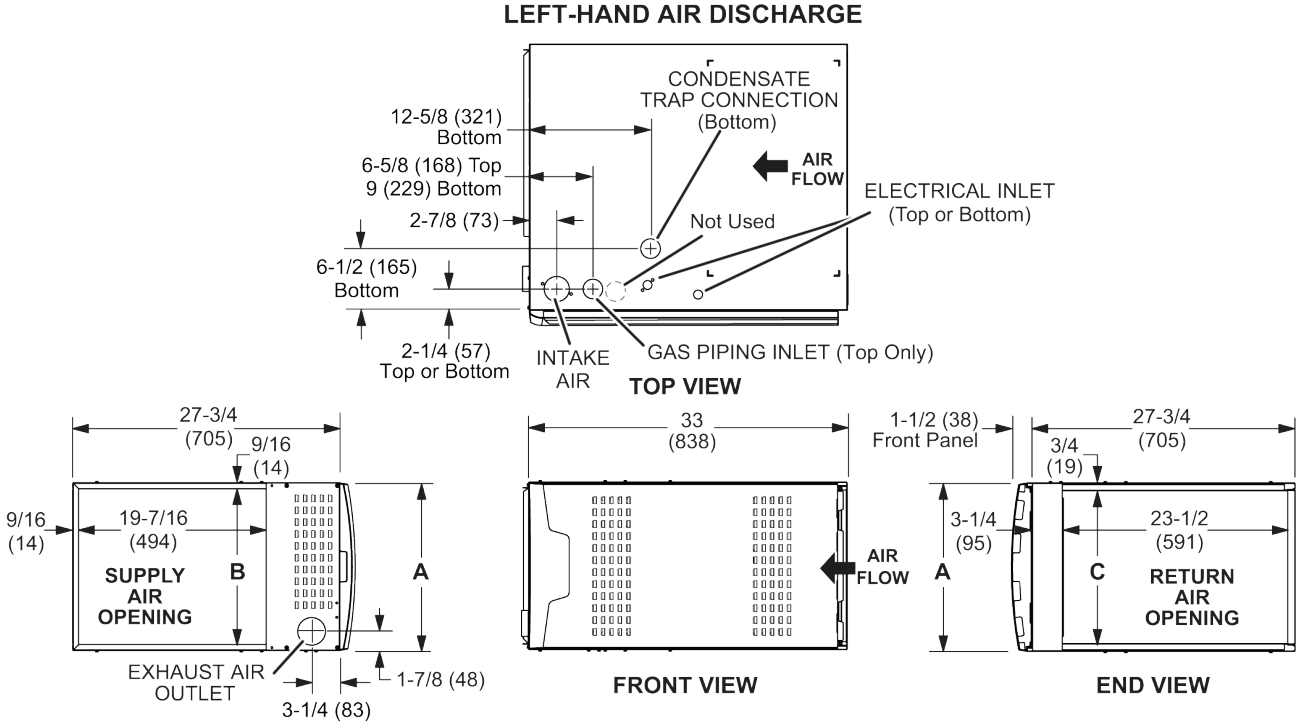

RIGHT-HAND AIR DISCHARGE

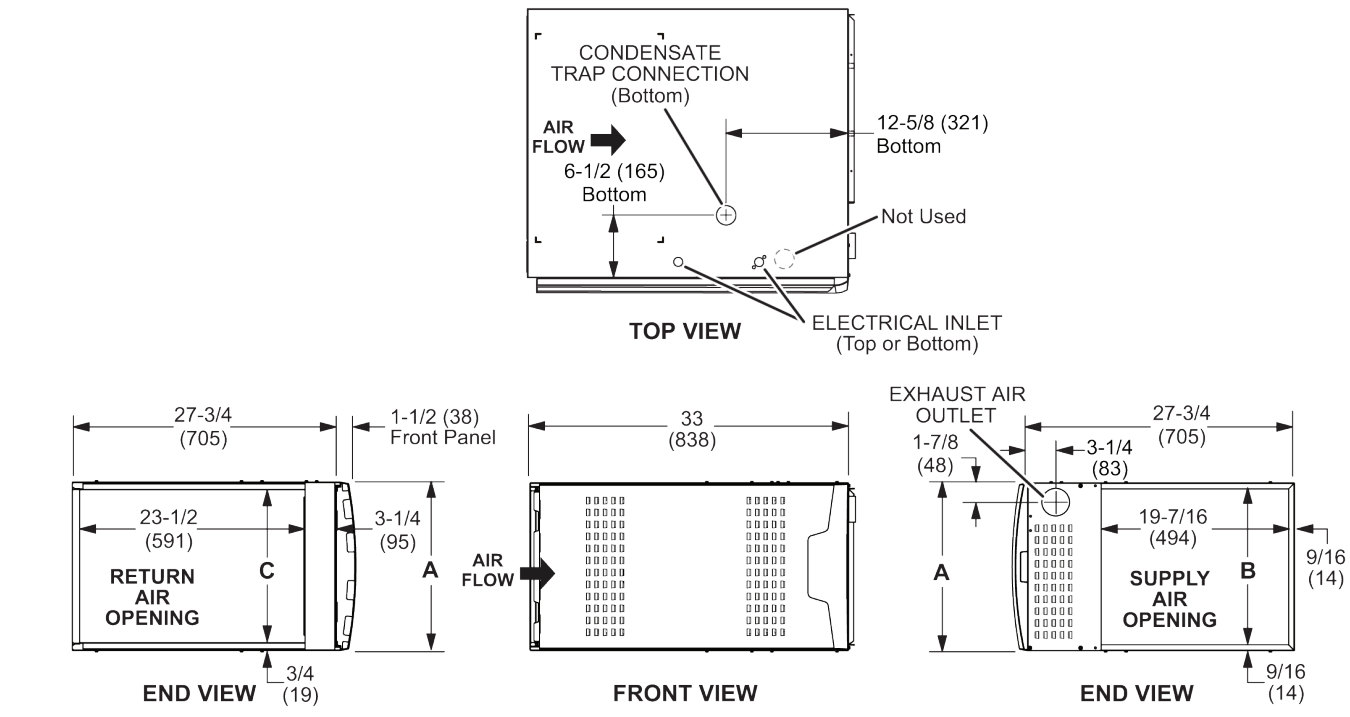

ACCESSORY LIST

DESCRIPTION	CATALOG NUMBER
RETURN AIR BASE	
Return Air Base 17.5 Inch	68W62
Return Air Base 21.0 Inch	68W63
COMFORT SYNC WI-FI THERMOSTAT	
Comfort Sync Wi-Fi Thermostat	1.841197
HORIZONTAL SUSPENSION KIT	
80% & 90% Kit	51W10
FLUSH MOUNT TERMINATION (90% FURNACES ONLY)	
2" & 3.0" Vent – US Version	51W11
2" & 3.0" Vent – ULC S636 Compliant (Canada)	51W12
CONCENTRIC VENT KIT (90% FURNACES ONLY)	
1-1/2" Vent Version (United States)	71M80
1-1/2" and 2" Vent Version (Canada)	44W92
2" Vent Version (United States)	69M29
3" Vent Version (United States)	60L46
3" Vent Version (Canada)	44W93
EXTERNAL FILTER RACK KITS	
1 pack (16 x 25)	1.841018
10 pack (16 x 25)	1.841039

Note: For vent length and clearances to combustibles, please reference installation instructions.

ALLIED™ Air Enterprises

1-800-448-5872

All specifications and illustrations subject to change without notice and without incurring obligations.

FORM NO. A972VX-100 (04/2018)

© 2018 Allied Air Enterprises LLC, a Lennox International Inc. Company

Printed in the U.S.A.