A802VX
PRODUCT SPECIFICATIONS

TWO STAGE VARIABLE SPEED ULTRA LOX NOX GAS FURNACE

FORM NO. A802VX-100 (02/2018)



DESCRIPTION

The A802VX model is an 80% AFUE gas furnace used for upflow or horizontal applications only, manufactured with aluminized steel tubular heat exchangers. A802VX units are available in heating capacities of 60,000 to 100,000 Btuh and cooling applications up to 5 tons. Units are approved for installations up 4500 feet above sea level and factory equipped for use with natural gas only. The A802VX is Comfort Sync™ thermostat enabled with two-stage variable speed integrated control. The A802VX meets the California Ultra Low Nitrogen Oxides (NOx) Standards (14ng/J) and California Seasonal Efficiency requirements. All units use a redundant gas valve to assure safety shut-off as required by C.S.A. All specifications are subject to change without notice.

VENTING

- Rotatable draft inducer for venting flexibility

INSTALLATION FEATURES

- Left and right utility connections
- Removable floor base for bottom return air
- Zero step horizontal conversion
- Compliant with 14NG/J emission requirements

WARRANTY

10 year limited parts warranty / lifetime heat exchanger warranty available. See limited warranty document for details.

Note: Not for sale in Canada

CONFIGURATIONS

- Upflow / Horizontal

HEAT EXCHANGER DESIGN

- Aluminized steel tubular heat exchanger

CABINET DESIGN

- Compact 33” height
- Standardized widths for easy coil fit

AIR DELIVERY SYSTEM

- ECM™ Variable speed blower motor
- Easily removable slide out blower design

CONTROLS

- Communicating control enabled
- Two stage gas valve
- Thermostat flexibility: works with the Comfort Sync™ T-Stat or a conventional 24V T-Stat
- Self diagnostics saves last 5 fault codes regardless of power interruption

MODEL NUMBER GUIDE

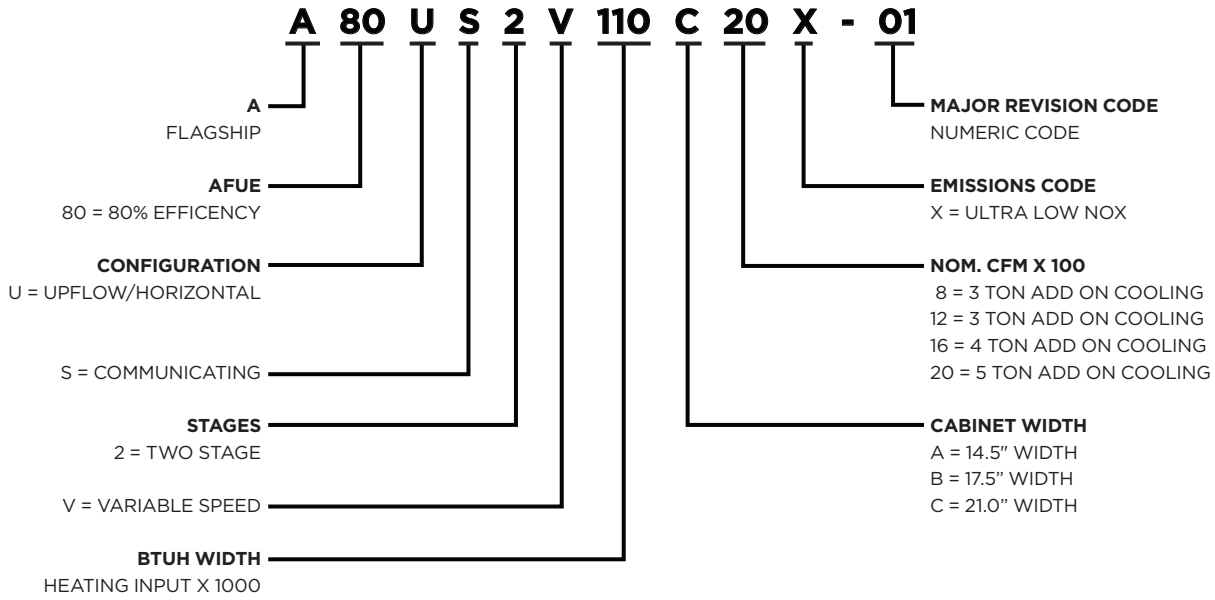

PHYSICAL AND ELECTRICAL DATA

Model	Input (Btuh)	Output (Btuh)	AFUE	Nominal Cooling Capacity	Gas Inlet (in.)	Volts/ Hz/Phase	Max. Time Delay Breaker or Fuse	Nominal Full Load Amps	Trans (VA)	Approx Shipping Weight (lbs)
A80US2V060A12X	60,000	48,000	80%	3 Tons	1/2	120-60-1	15	7.7	40	112
A80US2V080B16X	80,000	64,000	80%	4 Ton	1/2	120-60-1	20	12.8	40	138
A80US2V080C20X	80,000	64,000	80%	5 Ton	1/2	120-60-1	20	12.8	40	157
A80US2V100C20X	100,000	80,000	80%	5 Ton	1/2	120-60-1	20	12.8	40	161

BLOWER PERFORMANCE DATA

A80US2V060A12X BLOWER PERFORMANCE (less filter)

BOTTOM RETURN AIR

0 through 0.8 in. w.g. (Heating) and 0 through 1.0 in. w.g. (Cooling) External Static Pressure Range

HEATING								
[1] Heating Speed DIP Switch Settings	First Stage Heating Speed - cfm				Second Stage Heating Speed - cfm			
+24%	1030				1140			
+18%	965				1075			
+12%	925				1020			
+6%	870				965			
Factory Default	825				915			
-6%	775				865			
-12%	735				810			
-18%	685				760			
COOLING								
[1] Cooling Speed DIP Switch Settings	First Stage Cooling Speed - cfm				Second Stage Cooling Speed - cfm			
	Low	Medium-Low	Medium-High	[2] High	Low	Medium-Low	Medium-High	[2] High
+	595	715	815	920	845	1015	1175	1340
Factory Default	565	680	735	840	790	945	1070	1215
-	510	610	695	780	715	845	980	1120

A80US2V080B16X BLOWER PERFORMANCE (less filter)

BOTTOM RETURN AIR

0 through 0.8 in. w.g. (Heating) and 0 through 1.0 in. w.g. (Cooling) External Static Pressure Range

HEATING								
[1] Heating Speed DIP Switch Settings	First Stage Heating Speed - cfm				Second Stage Heating Speed - cfm			
+24%	1350				1500			
+18%	1270				1420			
+12%	1200				1340			
+6%	1130				1270			
Factory Default	1060				1190			
-6%	970				1130			
-12%	880				1025			
-18%	845				950			
COOLING								
[1] Cooling Speed DIP Switch Settings	First Stage Cooling Speed - cfm				Second Stage Cooling Speed - cfm			
	Low	Medium-Low	Medium-High	[2] High	Low	Medium-Low	Medium-High	[2] High
+	640	870	1030	1200	1020	1310	1535	1750
Factory Default	590	770	925	1100	935	1200	1400	1600
-	545	635	750	960	815	1080	1260	1430

[1] Cooling and heating speeds are based on a combination of DIP switch settings on the furnace control. Refer to Installation Instructions for specific DIP Switch Settings.

[2] Factory default setting.

NOTES - The effect of static pressure is included in air volumes shown.

- First stage HEAT is approximately 91% of the same second stage HEAT.
- First stage COOL (two-stage air conditioning units only) is approximately 70% of the same second stage COOL speed position.
- Continuous Fan Only speed is selectable at 28%, 38%, 70% and 100% of the selected second stage cooling speed - minimum 280 for A80US2V060A12X and 380 cfm for A80US2V080B16X.
- Zoning System Applications - Minimum blower speed is 250 cfm for A80US2V060A12X and 380 cfm A80US2V080B16X.

BLOWER PERFORMANCE DATA

A80US2V080C20X BLOWER PERFORMANCE (less filter)

BOTTOM RETURN AIR, RETURN AIR FROM BOTH SIDES OR RETURN AIR FROM BOTTOM AND ONE SIDE

0 through 0.8 in. w.g. (Heating) and 0 through 1.0 in. w.g. (Cooling) External Static Pressure Range

HEATING								
[1] Heating Speed DIP Switch Settings	First Stage Heating Speed - cfm				Second Stage Heating Speed - cfm			
+24%	1375				1530			
+18%	1330				1450			
+12%	1260				1390			
+6%	1185				1315			
Factory Default	1130				1235			
-6%	1050				1165			
-12%	980				1090			
-18%	940				1020			
COOLING								
[1] Cooling Speed DIP Switch Settings	First Stage Cooling Speed - cfm				Second Stage Cooling Speed - cfm			
	Low	Medium-Low	Medium-High	[2] High	Low	Medium-Low	Medium-High	[2] High
+	1080	1235	1410	1655	1540	1745	2000	2300
Factory Default	975	1125	1290	1500	1390	1595	1815	2130
-	880	1010	1165	1360	1265	1440	1630	1930

A80US2V100C20X BLOWER PERFORMANCE (less filter)

BOTTOM RETURN AIR, RETURN AIR FROM BOTH SIDES OR RETURN AIR FROM BOTTOM AND ONE SIDE

0 through 0.8 in. w.g. (Heating) and 0 through 1.0 in. w.g. (Cooling) External Static Pressure Range

HEATING								
[1] Heating Speed DIP Switch Settings	First Stage Heating Speed - cfm				Second Stage Heating Speed - cfm			
+24%	1690				1855			
+18%	1605				1765			
+12%	1525				1675			
+6%	1445				1585			
Factory Default	1360				1495			
-6%	1280				1405			
-12%	1200				1315			
-18%	1115				1230			
COOLING								
[1] Cooling Speed DIP Switch Settings	First Stage Cooling Speed - cfm				Second Stage Cooling Speed - cfm			
	Low	Medium-Low	Medium-High	[2] High	Low	Medium-Low	Medium-High	[2] High
+	1060	1220	1330	1565	1535	1710	1910	2210
Factory Default	970	1075	1180	1430	1400	1565	1715	2015
-	875	980	1070	1255	1260	1400	1560	1815

[1] Cooling and heating speeds are based on a combination of DIP switch settings on the furnace control. Refer to Installation Instructions for specific DIP Switch Settings.

[2] Factory default setting.

NOTES - The effect of static pressure is included in air volumes shown.

- First stage HEAT is approximately 91% of the same second stage HEAT.
- First stage COOL (two-stage air conditioning units only) is approximately 70% of the same second stage COOL speed position.
- Continuous Fan Only speed is selectable at 28%, 38%, 70% and 100% of the selected second stage cooling speed - minimum 450 cfm.
- Zoning System Applications - Minimum blower speed is 450 cfm.

DIMENSIONS UPFLOW (IN.)

Model	A		B		C		D	
	in.	mm	in.	mm	in.	mm	in.	mm
A80US2V060A12X	14-1/2	368	13-3/8	340	13	330	4-3/4	121
A80US2V080B16X	17-1/2	446	16-3/8	416	16	406	6-1/4	159
A80US2V080C20X	21	533	19-7/8	504	19-1/2	495	8	203
A80US2V100C20X								

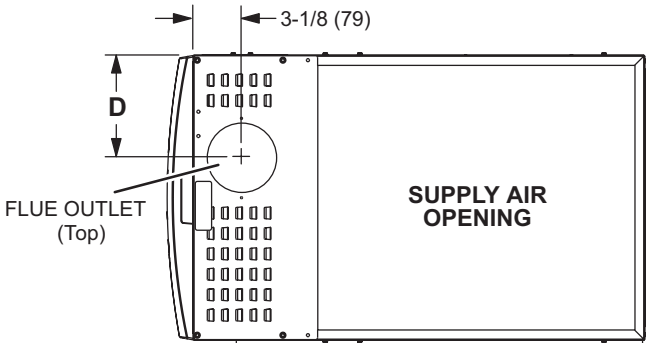

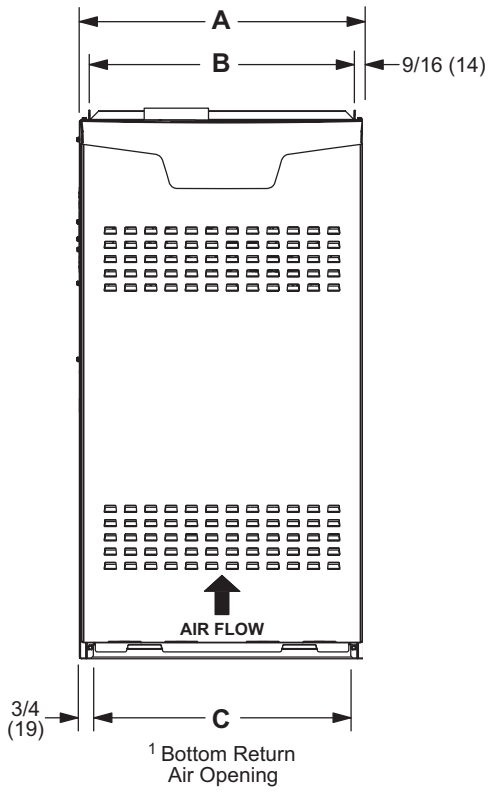

FRONT VIEW

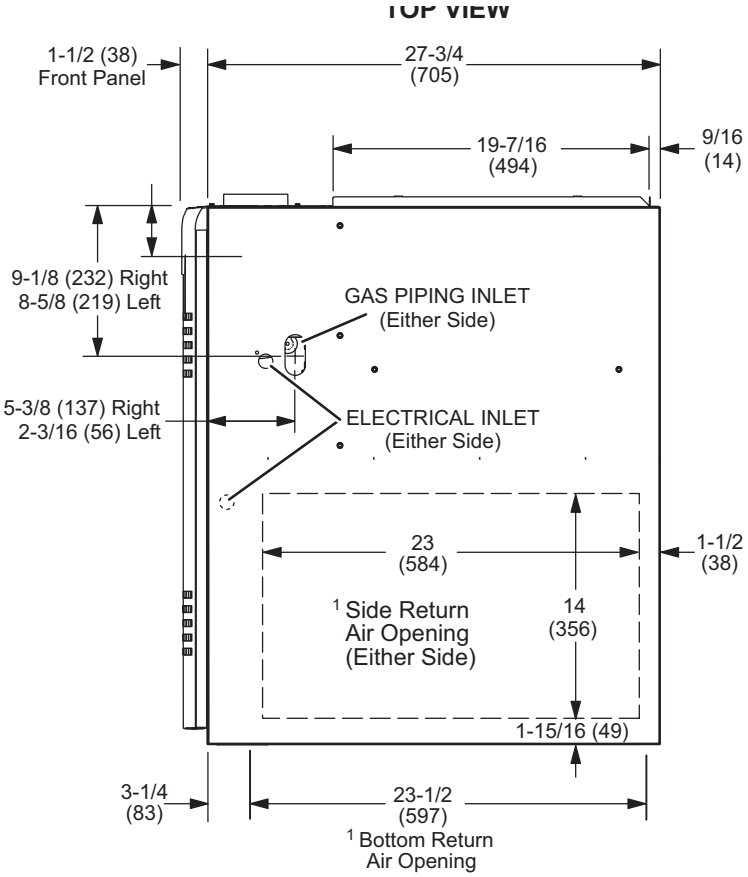

SIDE VIEW

DIMENSIONS HORIZONTAL (IN.)

LEFT-HAND AIR DISCHARGE

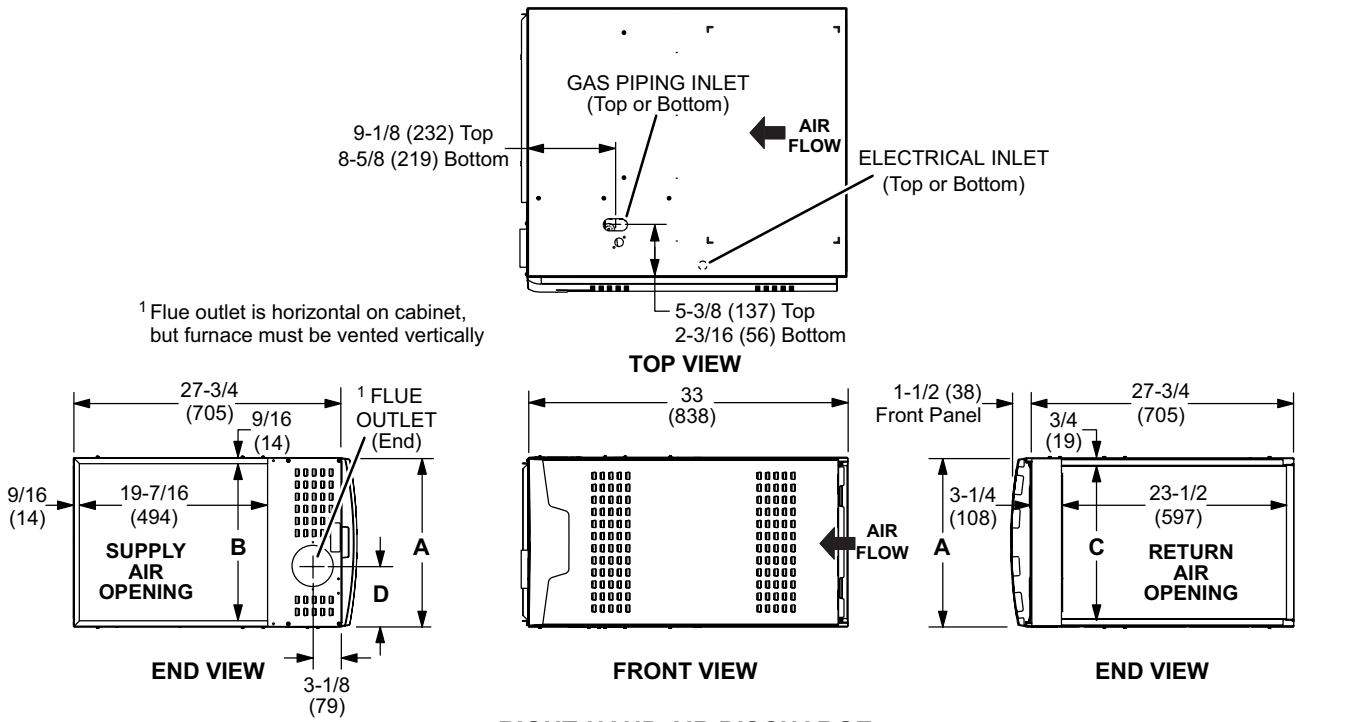

1 Flue outlet is horizontal on cabinet, but furnace must be vented vertically

RIGHT-HAND AIR DISCHARGE

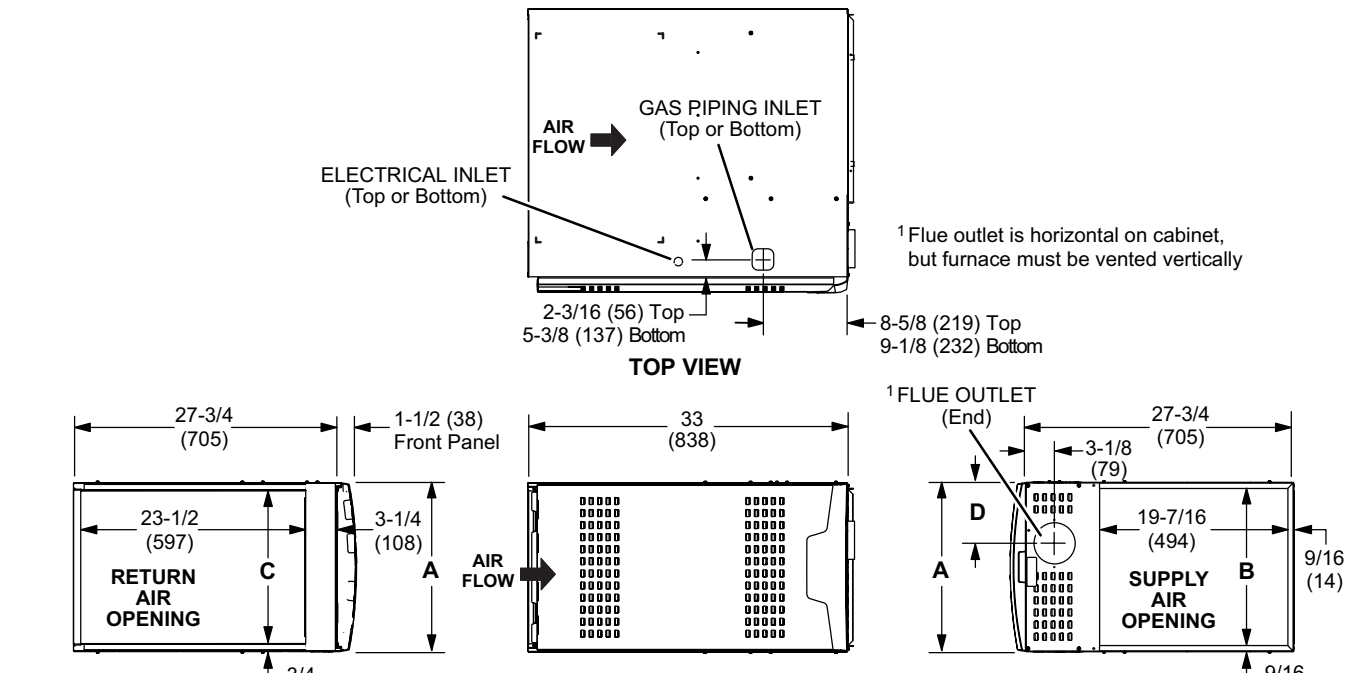

1 Flue outlet is horizontal on cabinet, but furnace must be vented vertically

ACCESSORY LIST

CATALOG NUMBER	DESCRIPTION
External Filter Rack kits	
1.841018	1 pack (16 x 25)
1.841039	10 pack (16 x 25)
Natural To LP KITS	
73W32	for -1 models
77W10	for -2 models
11K48	Replaces 78W94 and 77W08
11K47	High Altitude (>7500')
Return Air Base	
68W61	Return Air Base 14.5 Inch, A Width
68W62	Return Air Base 17.5 Inch, B Width
68W63	Return Air Base 21.0 Inch, C Width
Horizontal Suspension Kit	
51W10	80% & 90% Kit
Combustible Floor Base	
11M59	14.5 Inch, A Width
11M60	17.5 Inch, B Width
11M61	21.0 Inch, C Width

ALLIED™ Air Enterprises

1-800-448-5872

All specifications and illustrations subject to change without notice and without incurring obligations.

FORM NO. A802VX-100 (02/2018)

© 2018 Allied Air Enterprises LLC, a Lennox International Inc. Company

Printed in the U.S.A.