AC Pro MZHS-Series 9-24K Service Manual

Models:

AFH(09)DA-D3DNA1A-I

AFH(12)DA-D3DNA1A-I

AFH(18)DB-D3DNA1A-I

AFH(21)DB-D3DNA1A-I

AFH(24)DB-D3DNA1A-I

(Refrigerant R410A)

Table of Contents

Part Ⅰ: Technical Information 1

1. Summary 1

2. Specifications 2

3. Outline Dimension Diagram 5

4. Refrigerant System Diagram 6

5. Electrical Part 7

5.1 Wiring Diagram 7

5.2 PCB Printed Diagram 8

6. Function and Control 9

6.1 Introduction of Control Panel 9

6.2 Introduction of Control Panel 11

Part Ⅱ: Installation and Maintenance 13

7. Notes for Installation and Maintenance 13

8. Installation Manual 16

8.1 Preparations for Installation 17

8.2 Location for Installation 17

8.3 Wiring Requirements 18

9. Installation Instructions 20

10. Wiring Work 28

11. Maintenance 30

11.1 Error Code List 30

11.2 Troubleshooting for Main Malfunction 38

11.3 Maintenance Method for Normal Malfunction 42

12. Exploded View and Parts List 44

11. Removal Procedure 48

Part Ⅰ : Technical Information

1. Summary

Outdoor Unit

AFH(09)DA-D3DNA1A-I
AFH(12)DA-D3DNA1A-I

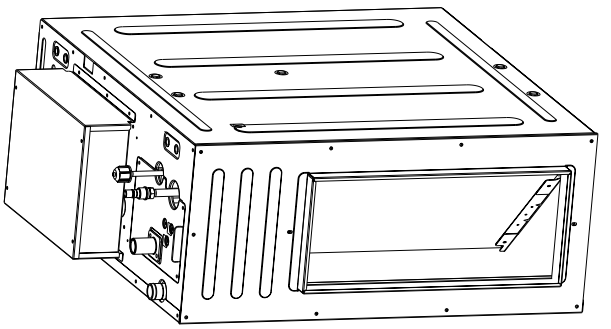

AFH(18)DB-D3DNA1A-I
AFH(21)DB-D3DNA1A-I
AFH(24)DB-D3DNA1A-I

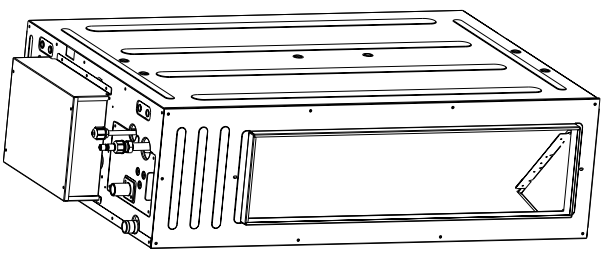

2. Specifications

Parameter		Unit	Value	
Model			AFH(09)DA-D3DNA1A/I	AFH(12)DA-D3DNA1A/I
Product Code			68644	68645
Power Supply	Rated Voltage	V~	208/230	208/230
	Rated Frequency	Hz	60	60
	Phases		1	1
Cooling Capacity		Btu/h	9000	12000
Heating Capacity		Btu/h	9500	13000
Cooling Power Input		KW	0.09	0.09
Heating Power Input		KW	0.09	0.09
Cooling Current Input		A	0.4	0.4
Heating Current Input		A	0.4	0.4
Air flow volume(SH/H/M/L/SL)		CFM	324/253/212/188/-	324/253/212/188/-
Dehumidifying Volume		Pint/h	1.69	1.69
Fan Type			Centrifugal	Centrifugal
Fan Diameter-height		inch	Φ8~4 7/32	Φ8~4 7/32
Fan Motor Speed		rpm	860/670/570/510	940/770/670/570
Fan Motor Power Output		W	150	150
Fan Motor Power Input		W	/	/
Motor Full Load Amp(FLA)		A	0.4	0.4
Fan Motor Capacitor		μF	/	/
Evaporator Material			Aluminum fin-copper tube	Aluminum fin-copper tube
Evaporator Pipe Diameter		inch	Φ5/16	Φ5/16
Evaporator Number of Rows-Fin Pitch		-	2	2
Evaporator Length(L)XHeight(H)XWidth(W)		inch	18 1/2X12 1/8X1/2	470X308X38
Fuse Current		A	5	5
Sound Pressure Level(SH/H/M/L/SL)		dB (A)	38/35/30/26/-	38/35/30/26/-
Sound Power Level(SH/H/M/L/SL)		dB (A)	52/49/44/40/-	52/49/44/40/-
Dimension of Outline(LXWXH)		inch	32 43/64X29 11/16X11 13/16	32 43/64X29 11/16X11 13/16
Dimension of Carton Box(LXWXH)		inch	35 13/64X31 11/16X13 37/64	35 13/64X31 11/16X13 37/64
Dimension of Package(LXWXH)		inch	35 5/16X31 13/16X14 11/16	35 5/16X31 13/16X14 11/16
Net Weight		lb	70.6	70.6
Gross Weight		lb	83.8	83.8
Liquid pipe		inch	Φ3/8	Φ1/2
Gas Pipe(to indoor unit)		inch	Φ1/4	Φ1/4

The above data is subject to change without notice. Please refer to the nameplate of the unit.

Parameter		Unit	Value	
Model			AFH(18)DB-D3DNA1A/	AFH(21)DB-D3DNA1A/I
Product Code			68648	68649
Power Supply	Rated Voltage	V~	208/230	208/230
	Rated Frequency	Hz	60	60
	Phases		1	1
Cooling Capacity		Btu/h	18000	21000
Heating Capacity		Btu/h	19000	23000
Cooling Power Input		KW	0.16	0.16
Heating Power Input		KW	0.16	0.16
Cooling Current Input		A	0.7	0.7
Heating Current Input		A	0.7	0.7
Air flow volume(SH/H/M/L/SL)		CFM	589/412/312/288/-	589/412/312/288/-
Dehumidifying Volume		Pint/h	2	1.0
Fan Type			Centrifugal	Centrifugal
Fan Diameter-height		inch	Φ8~4 7/32	Φ8~4 7/32
Fan Motor Speed		rpm	990/700/530/490	990/700/530/490
Fan Motor Power Output		W	200	200
Fan Motor Power Input		W	/	/
Motor Full Load Amp(FLA)		A	0.7	0.7
Fan Motor Capacitor		μF	/	/
Evaporator Material			Aluminum fin-copper tube	Aluminum fin-copper tube
Evaporator Pipe Diameter		inch	Φ5/16	Φ5/16
Evaporator Number of Rows-Fin Pitch		-	3	3
Evaporator Length(L)XHeight(H)XWidth(W)		inch	29 41/64X12 1/8X2 1/2	29 41/64X12 1/8X2 1/2
Fuse Current		A	5	5
Sound Pressure Level(SH/H/M/L/SL)		dB (A)	39/33/29/26/-	39/33/29/26/-
Sound Power Level(SH/H/M/L/SL)		dB (A)	49/43/39/36/-	49/43/39/36/-
Dimension of Outline(LXWXH)		inch	44 31/64X29 11/16X11 13/16	44 31/64X29 11/16X11 13/16
Dimension of Carton Box(LXWXH)		inch	47 21/64X37 57/64X13 37/64	47 21/64X37 57/64X13 37/64
Dimension of Package(LXWXH)		inch	47 7/16X32 1/64X14 11/64	47 7/16X32 1/64X14 11/64
Net Weight		lb	92.6	92.6
Gross Weight		lb	106.9	106.9
Liquid pipe		inch	Φ5/8	Φ5/8
Gas Pipe(to indoor unit)		inch	Φ3/8	Φ3/8

The above data is subject to change without notice. Please refer to the nameplate of the unit.

Parameter		Unit	Value
Model			AFH(24)DB-D3DNA1A/I
Product Code			68646
Power Supply	Rated Voltage	V~	208/230
	Rated Frequency	Hz	60
	Phases		1
Cooling Capacity		Btu/h	24000
Heating Capacity		Btu/h	27000
Cooling Power Input		KW	0.21
Heating Power Input		KW	0.21
Cooling Current Input		A	0.9
Heating Current Input		A	0.9
Air flow volume(SH/H/M/L/SL)		CFM	736/559/453/406/-
Dehumidifying Volume		Pint/h	2.5
Fan Type			Centrifugal
Fan Diameter-height		inch	Φ8~4 7/32
Fan Motor Speed		rpm	1050/800/650/580
Fan Motor Power Output		W	200
Fan Motor Power Input		W	/
Motor Full Load Amp(FLA)		A	0.7
Fan Motor Capacitor		μF	/
Evaporator Material			Aluminum fin-copper tube
Evaporator Pipe Diameter		inch	Φ5/16
Evaporator Number of Rows-Fin Pitch		-	2
Evaporator Length(L)XHeight(H)XWidth(W)		inch	29 41/64X12 1/8X2 1/2
Fuse Current		A	5
Sound Pressure Level(SH/H/M/L/SL)		dB (A)	39/33/29/26/-
Sound Power Level(SH/H/M/L/SL)		dB (A)	49/43/39/36/-
Dimension of Outline(LXWXH)		inch	44 31/64X29 11/16X11 13/16
Dimension of Carton Box(LXWXH)		inch	47 21/64X37 57/64X13 37/64
Dimension of Package(LXWXH)		inch	47 7/16X32 1/64X14 11/64
Net Weight		Ib	92.6
Gross Weight		Ib	106.9
Liquid pipe		inch	Φ5/8
Gas Pipe(to indoor unit)		inch	Φ3/8

The above data is subject to change without notice. Please refer to the nameplate of the unit.

3. Outline Dimension Diagram

AFH(09)DA-D3DNA1A/I AFH(12)DA-D3DNA1A/I

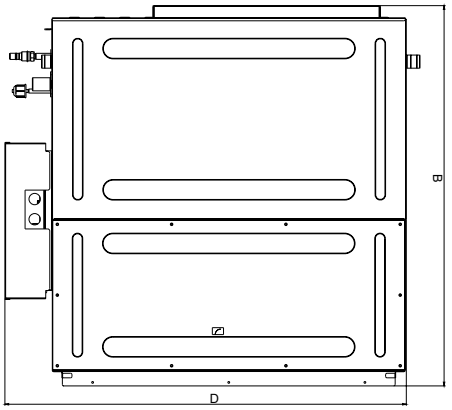

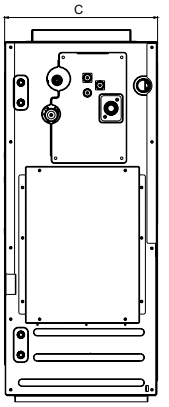

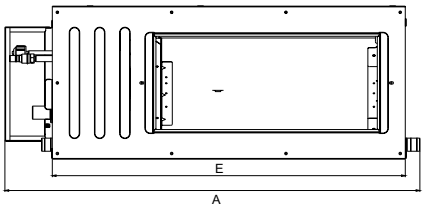

AFH(18)DB-D3DNA1A/I AFH(21)DB-D3DNA1A/I AFH(24)DB-D3DNA1A/I

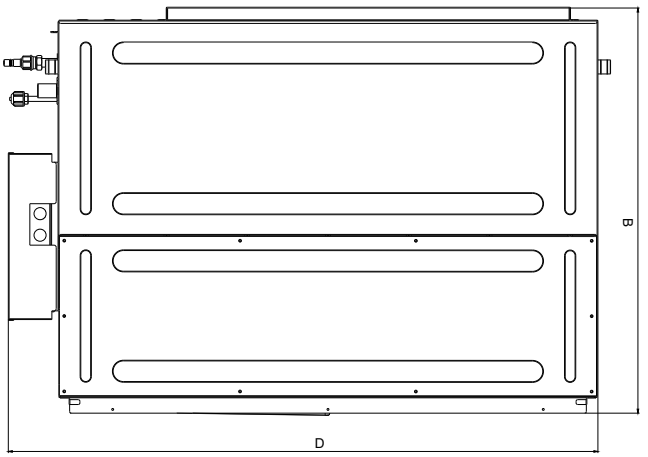

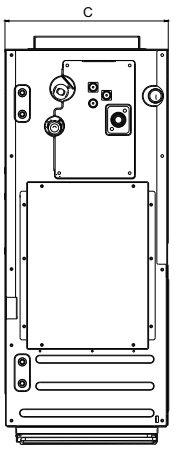

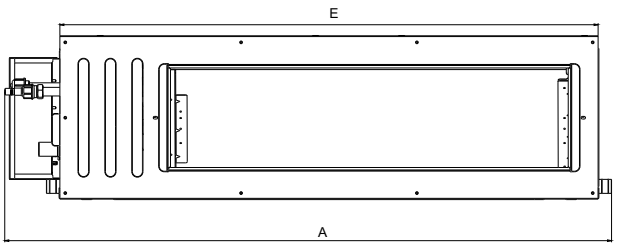

Model	A	B	C	D	E
09/12K	32 43/64	29 11/16	11 13/16	31 11/32	27 9/16
18/21/24K	44 31/64	29 11/16	11 13/16	43 7/64	39 3/8

4. Refrigerant System Diagram

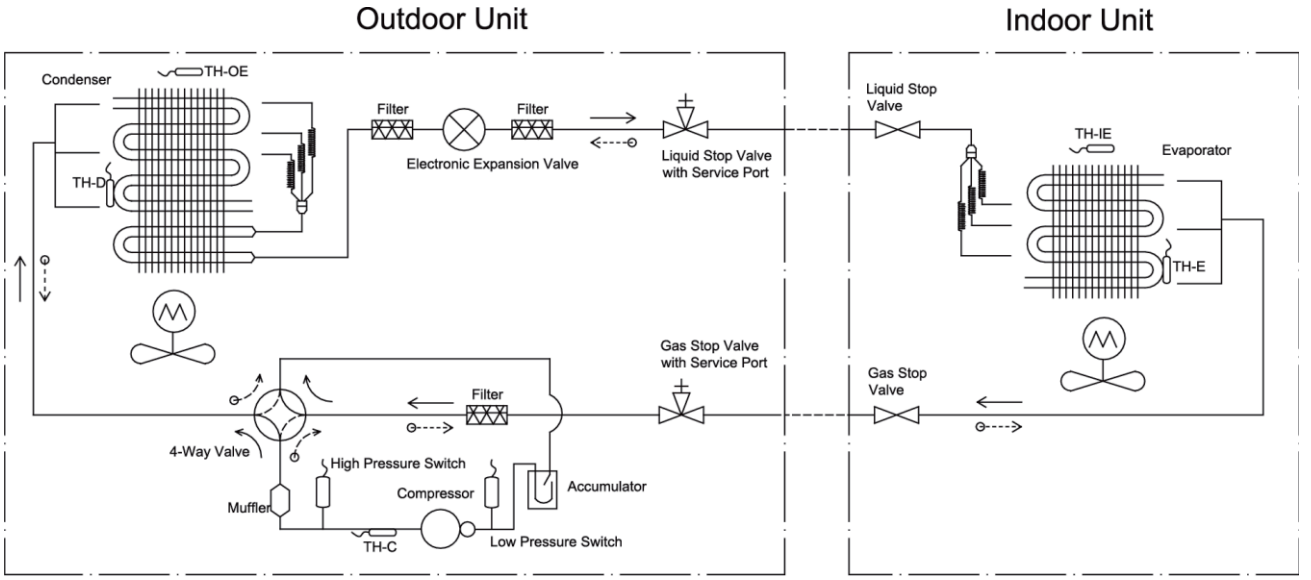

TH-OE: Outdoor Environment Thermal Bulb
TH-C: Outdoor Condenser Thermal Bulb
TH-D: Compressor Discharge Thermal Bulb

← Cooling
⊖----> Heating

TH-IE: Indoor Environment Thermal Bulb
TH-E: Indoor Evapolator Thermal Bulb

Note:
1.it is just a schematic diagram and some parts may differ from the real objects inside the unit.

5. Electrical Part

5.1 Wiring Diagram

●Instruction

Symbol	Symbol Color	Symbol	Symbol Color	Symbol	Name
WH	White	GN	GREEN	COMP	Compressor
YE	Yellow	BN	Brown	⏚	Grouding wire
RD	Red	BU	Blue		
YEGN	Yellow/Green	BK	Black		
VT	Violet	OG	Orange		

● Outdoor Unit

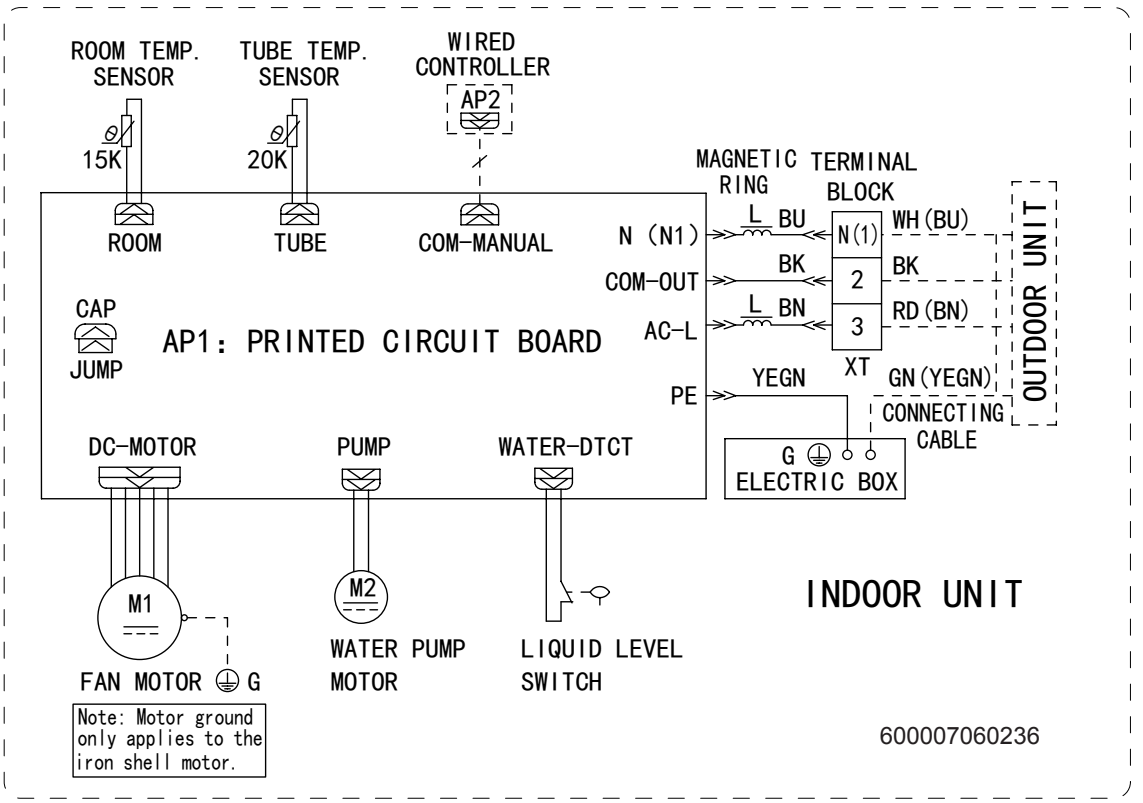

These circuit diagrams are subject to change without notice, please refer to the one supplied with the unit.

5.2 PCB Printed Diagram

● TOP VIEW

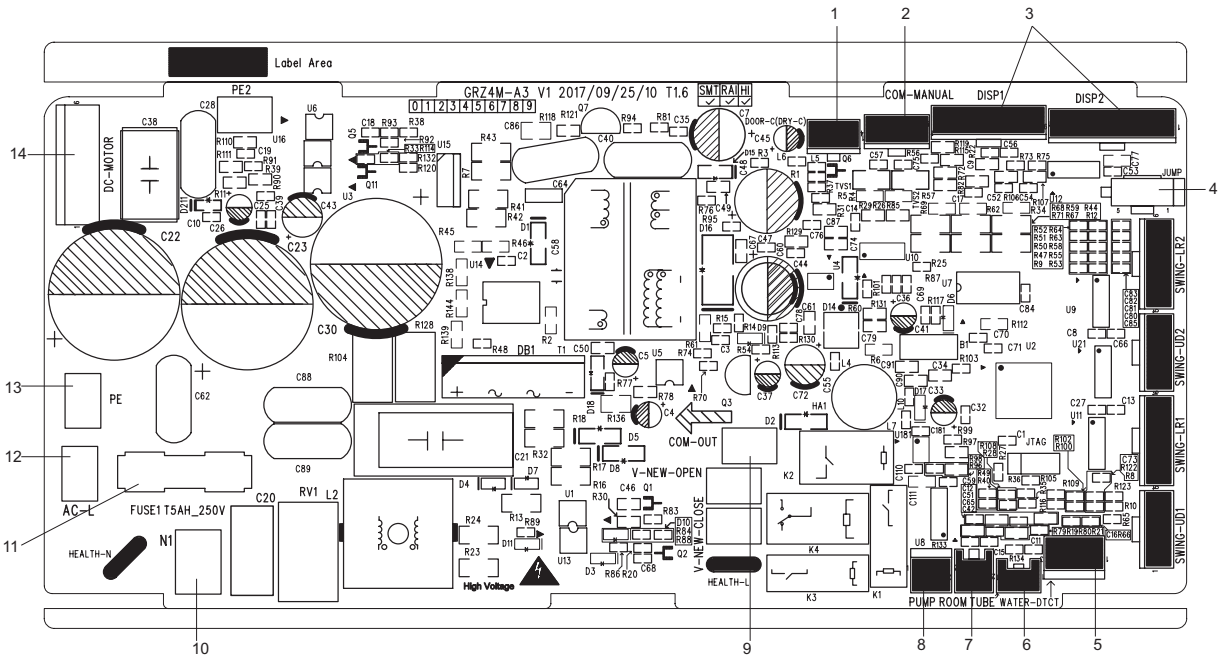

1	Interface of dry contact
2	Wired controlller terminal
3	Dispaly
4	Jumper cap
5	Water overflow protection
6	Interface of tube temperature sensor
7	Interface of ambient temperature sensor
8	Water pump
9	Terminal with indoor unit communication
10	Neutral wire terminal
11	Fuse
12	Live wire terminal
13	Neutral wire terminal
14	Wiring terminal for DC motor

● BOTTOM VIEW

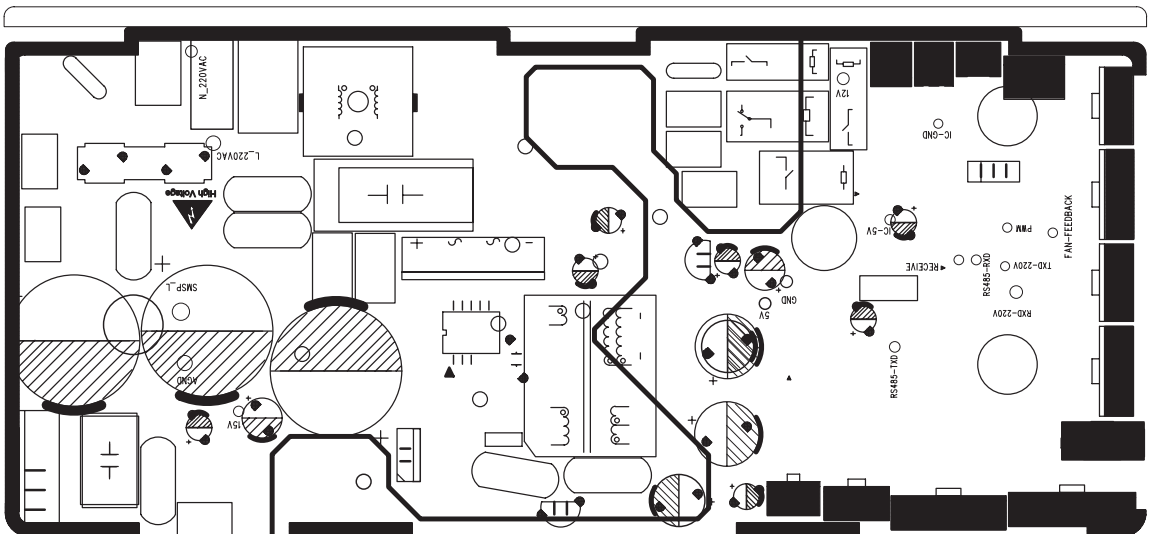

6. Function and Control

After putting through the power, air conditioner will give out a sound and indicators on control panel will be on. After that, you operate the air conditioner through remote controller or control panel.

6.1 Introduction of Control Panel

1.1 Display

Fig.1 Appearance of wired controller

1.2 Instructions for Related Displayed Symbols

No.	Symbols	Instructions
1		Up and down swing function
2		Left and right swing function
3		Fresh air function
4		Sleep function
5		Auto mode
6		Cooling mode
7		Dry mode
8		Fan mode
9		Heating mode
10		Health function
11		I-Demand function
12		Absence function
13		Shielding status (Buttons, temperature, ON/OFF, mode or energy saving is shielded by remote monitor)
14		Current set fan speed
15		Memory function (Memory in power failure)
16		DRED function
17		Save function
18		X-fan function

20		Timer on status
21		Gate card pulled-off status or nobody presented status
22		Quiet function
23		Function lock

1.3 Button Grapics

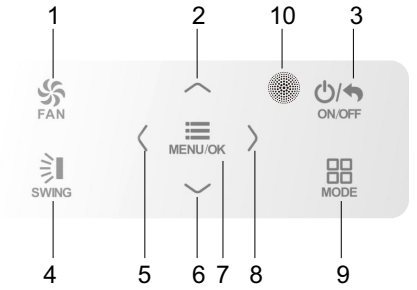

Fig. 2 Button graphics

1.4 Function Instructions of Buttons

No.	Button name	Button Function
1	FAN	Set low speed, medium speed,high speed, turbo and auto speed.
2	∧	(1) Set temperature (2) Set parameter (3) Move option cursor
6	¨	
3	ON/OFF/BACK	(1) Turn on or turn off unit (2) Return to last page
4	SWING	Set up&down swing and set left&right swing
5	Z	(1) Set related function on or off (2) Move option cursor (3) Set parameter
8	¥	
7	MENU/OK	(1) Enter menu page (2) Confirm setting
9	MODE	Set auto, cooling, dry, fan and heating modes for indoor unit.
10	Remote control receiver window	

6.2 Introduction of Control Panel

1.Basic function of system

(1)Cooling mode

(1) Under this mode, fan and swing operates at setting status. Temperature setting range is 16~30°C.

(2) During malfunction of outdoor unit or the unit is stopped because of protection, indoor unit keeps original operation status.

(2)Drying mode

(1) Under this mode, fan operates at low speed and swing operates at setting status. Temperature setting range is 16~30°C.

(2) During malfunction of outdoor unit or the unit is stopped because of protection, indoor unit keeps original operation status.

(3) Protection status is same as that under cooling mode.

(4) Sleep function is not available for drying mode.

(3)Heating mode

(1) Under this mode, Temperature setting range is 16~30°C.

(2) Working condition and process for heating mode:

When turn on the unit under heating mode, indoor unit enters into cold air prevention status. When the unit is stopped or at OFF status, and indoor unit has been started up just now, the unit enters into residual heat-blowing status.

(4)Working method for AUTO mode:

1.Working condition and process for AUTO mode:

a.Under AUTO mode, standard heating Tpreset=20°C and standard cooling Tpreset=25°C. The unit will switch mode automatically according to ambient temperature.

2.Protection function

a. During cooling operation, protection function is same as that under cooling mode.

b. During heating operation, protection function is same as that under heating mode.

3. Display: Set temperature is the set value under each condition. Ambient temperature is (Tamb.-Tcompensation) for heat pump unit and Tamb. for cooling only unit.

4. If theres I feel function, Tcompensation is 0. Others are same as above.

(5)Fan mode

Under this mode, indoor fan operates at set fan speed. Compressor, outdoor fan, 4-way valve and electric heating tube stop operation. Indoor fan can select to operate at high, medium, low or auto fan speed. Temperature setting range is 16~30°C.

2. Other control

(1) Buzzer

Upon energization or availably operating the unit or remote controller, the buzzer will give out a beep.

(2) Auto button

If press this auto button when turning off the unit, the complete unit will operate at auto mode. Indoor fan operates at auto fan speed and swing function is turned on. Press this auto button at ON status to turn off the unit.

(3) Auto fan

Heating mode: During auto heating mode or normal heating ode, auto fan speed will adjust the fan speed automatically according to ambient temperature and set temperature.

(4) Sleep

After setting sleep function for a period of time, system will adjust set temperature automatically.

(5) Timer function:

General timer and clock timer functions are compatible by equipping remote controller with different functions.

(6) Memory function

memorize compensation temperature, off-peak energization value.

Memory content: mode, up&down swing, light, set temperature, set fan speed, general timer (clock timer cant be memorized).

After power recovery, the unit will be turned on automatically according to memory content.

(7) Health function(only for the model with this function)

During operation of indoor fan, set health function by remote controller. Turn off the unit will also turn off health function.

Turn on the unit by pressing auto button, and the health is defaulted ON.

(8)Off-peak energization function:

Adjust compressors minimum stop time. The original minimum stop time is 180s and then we change to:

The time interval between two start-ups of compressor cant be less than 180+T s(0≤T≤15). T is the variable of controller. Thats to say the minimum stop time of compressor is 180s~195s. Read-in T into memory chip when refurbish the memory chip each time. After power recovery, compressor can only be started up after 180+T s at least.

(9) SE control mode

The unit operates at SE status.

(10) X-fan mode

When X-fan function is turned on, after turn off the unit, indoor fan will still operate at low speed for 2min and then the complete unit will be turned off. When x-fan function is turned off, after turn off the unit, the complete unit will be turned off directly.

(11) 8ºC heating function

Under heating mode, you can set 8ºC heating function by remote controller. The system will operate at 8ºC set temperature.

(12) Turbo fan control function

Set turbo function under cooling or heating mode to enter into turbo fan speed. Press fan speed button to cancel turbo wind.

No turbo function under auto, dry or fan mode.

Part Ⅱ : Installation and Maintenance

7. Notes for Installation and Maintenance

Safety Precautions: Important!

Please read the safety precautions carefully before installation and maintenance.
The following contents are very important for installation and maintenance.

Please follow the instructions below.

●The installation or maintenance must accord with the instructions.
●Comply with all national electrical codes and local electrical codes.
●Pay attention to the warnings and cautions in this manual.
●All installation and maintenance shall be performed by distributor or qualified person.
●All electric work must be performed by a licensed technician according to local regulations and the instructions given in this manual.
●Be caution during installation and maintenance. Prohibit incorrect operation to prevent electric shock, casualty and other accidents.

Warnings

Electrical Safety Precautions:

1. Cut off the power supply of air conditioner before checking and maintenance.
2. The air condition must apply specialized circuit and prohibit share the same circuit with other appliances.
3. The air conditioner should be installed in suitable location and ensure the power plug is touchable.
4. Make sure each wiring terminal is connected firmly during installation and maintenance.
5. Have the unit adequately grounded. The grounding wire cant be used for other purposes.
6. Must apply protective accessories such as protective boards, cable-cross loop and wire clip.
7. The live wire, neutral wire and grounding wire of power supply must be corresponding to the live wire, neutral wire and grounding wire of the air conditioner.
8. The power cord and power connection wires cant be pressed by hard objects.
9. If power cord or connection wire is broken, it must be replaced by a qualified person.
10. If the power cord or connection wire is not long enough, please get the specialized power cord or connection wire from the manufacture or distributor. Prohibit prolong the wire by yourself.
11. For the air conditioner without plug, an air switch must be installed in the circuit. The air switch should be all-pole parting and the contact parting distance should be more than 1/8 inch.
12. Make sure all wires and pipes are connected properly and the valves are opened before energizing.
13. Check if there is electric leakage on the unit body. If yes, please eliminate the electric leakage.
14. Replace the fuse with a new one of the same specification if it is burnt down; dont replace it with a cooper wire or conducting wire.
15. If the unit is to be installed in a humid place, the circuit breaker must be installed.

Installation Safety Precautions:

1. Select the installation location according to the requirement of this manual.(See the requirements in installation part)
2. Handle unit transportation with care; the unit should not be carried by only one person if it is more than 44.09lb.
3. When installing the indoor unit and outdoor unit, a sufficient fixing bolt must be installed; make sure the installation support is firm.
4. Ware safety belt if the height of working is above 78 3/4 inch.
5. Use equipped components or appointed components during installation.
6. Make sure no foreign objects are left in the unit after finishing installation.

Refrigerant Safety Precautions:

1. Avoid contact between refrigerant and fire as it generates poisonous gas; Prohibit prolong the connection pipe by welding.
2. Apply specified refrigerant only. Never have it mixed with any other refrigerant. Never have air remain in the refrigerant line as it may lead to rupture or other hazards.
3. Make sure no refrigerant gas is leaking out when installation is completed.
4. If there is refrigerant leakage, please take sufficient measure to minimize the density of refrigerant.
5. Never touch the refrigerant piping or compressor without wearing glove to avoid scald or frostbite.

Improper installation may lead to fire hazard, explosion, electric shock or injury.

Safety Precautions for Installing and Relocating the Unit:

To ensure safety, please be mindful of the following precautions.

Warnings

1. When installing or relocating the unit, be sure to keep the refrigerant circuit free from air or substances other than the specified refrigerant.
Any presence of air or other foreign substance in the refrigerant circuit will cause system pressure rise or compressor rupture, resulting in injury.
2.When installing or moving this unit, do not charge the refrigerant which is not comply with that on the nameplate or unqualified refrigerant.
Otherwise, it may cause abnormal operation, wrong action, mechanical malfunction or even series safety accident.
3.When refrigerant needs to be recovered during relocating or repairing the unit, be sure that the unit is running in cooling mode.Then, fully close the valve at high pressure side (liquid valve).About 30-40 seconds later, fully close the valve at low pressure side (gas valve), immediately stop the unit and disconnect power. Please note that the time for refrigerant recovery should not exceed 1 minute.
If refrigerant recovery takes too much time, air may be sucked in and cause pressure rise or compressor rupture, resulting in injury.
4.During refrigerant recovery, make sure that liquid valve and gas valve are fully closed and power is disconnected before detaching the connection pipe.
If compressor starts running when stop valve is open and connection pipe is not yet connected, air will be sucked in and cause pressure rise or compressor rupture, resulting in injury.
5.When installing the unit, make sure that connection pipe is securely connected before the compressor starts running.
If compressor starts running when stop valve is open and connection pipe is not yet connected, air will be sucked in and cause pressure rise or compressor rupture, resulting in injury.
6.Prohibit installing the unit at the place where there may be leaked corrosive gas or flammable gas.
If there leaked gas around the unit, it may cause explosion and other accidents.
7.Do not use extension cords for electrical connections. If the electric wire is not long enough, please contact a local service center authorized and ask for a proper electric wire.
Poor connections may lead to electric shock or fire.
8.Use the specified types of wires for electrical connections between the indoor and outdoor units. Firmly clamp the wires so that their terminals receive no external stresses.
Electric wires with insufficient capacity, wrong wire connections and insecure wire terminals may cause electric shock or fire.

Main Tools for Installation and Maintenance

1. Level meter, measuring tape	2. Screw driver	3. Impact drill, drill head, electric drill
4. Electroprobe	5. Universal meter	6. Torque wrench, open-end wrench, inner hexagon spanner 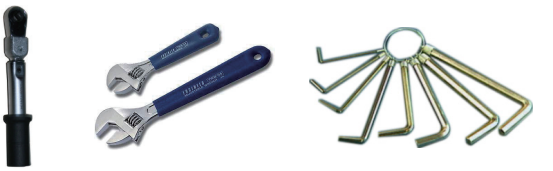
7. Electronic leakage detector	8. Vacuum pump	9. Pressure meter
10. Pipe pliers, pipe cutter	11. Pipe expander, pipe bender	12. Soldering appliance, refrigerant container

8. Installation Manual

Installation procedures

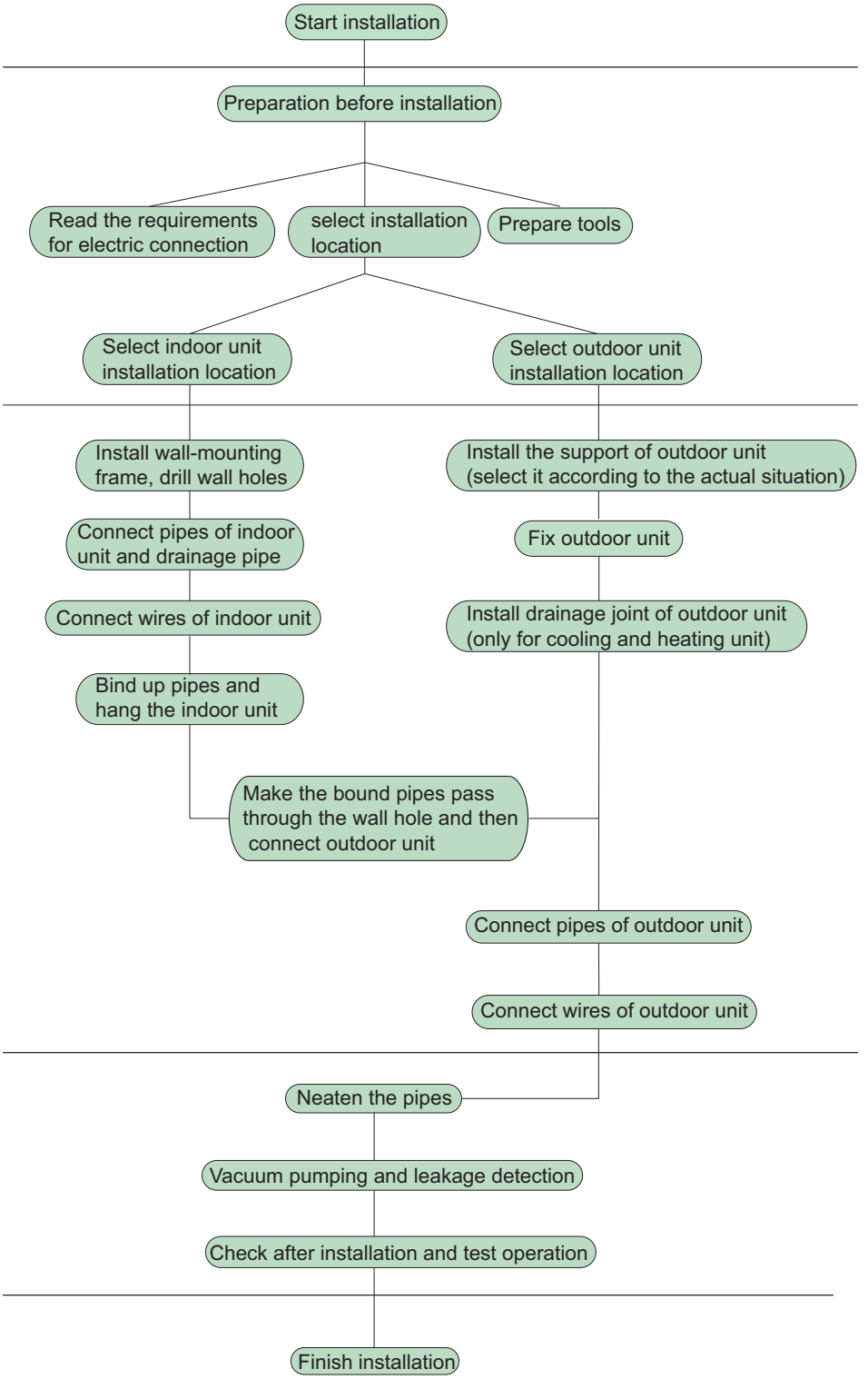

Note: this flow is only for reference; please find the more detailed installation steps in this section.

8.1 Preparations for Installation

NOTICE!
Product graphics are only for reference. Please refer to actual products. Unspecified measure unit is mm(in.)
Please use the supplied standard fittings listed below as instructed.

No.	Name	Appearance	Q'ty	Usage
1	Wired Controller		1	To control the indoor unit
2	Drain Hose Assembly		1	To connect with the hard PVC drain pipe
3	Special Nut		1	To be used for connecting the refrigerant pipe
4	M10X8 Nut with Washer		4	To be used together with the hanger bolt for installing the unit.
5	M10 Nut (M10X8.4 Nut)		4	To be used together with the hanger bolt for installing the unit.
6	M10 Washer (Spring Washer M10X2.6)		4	To be used together with the hanger bolt for installing the unit.
7	Insulation		1	To insulate the gas pipe
8	Insulation		1	To insulate the liquid pipe
9	Sponge		2	To insulate the drain pipe
10	Fastener		8	To fasten the sponge

8.2 Location for Installation

(1) The appliance shall not be installed in the laundry.
(2) The top holder must be strong enough to support unit's weight.
(3) Drain pipe can drain water out easily.
(4) There is no obstacle at inlet or outlet. Please ensure good air circulation.
(5) In order to make sure the space for maintenance, please install the indoor unit according to the dimension described below.
(6) Keep the unit away from heating source, inflammable gas or smoke.
(7) This is a concealed ceiling type unit.
(8) Indoor unit, outdoor unit, power cord and electric wire should stay at least 1m(39-3/8 in.) from the TV set and radio. Otherwise, these electrical appliances may have image interference and noise. (Even if the distance is 1m(39-3/8 in.), when there is strong electric wave, noise may still occur.)

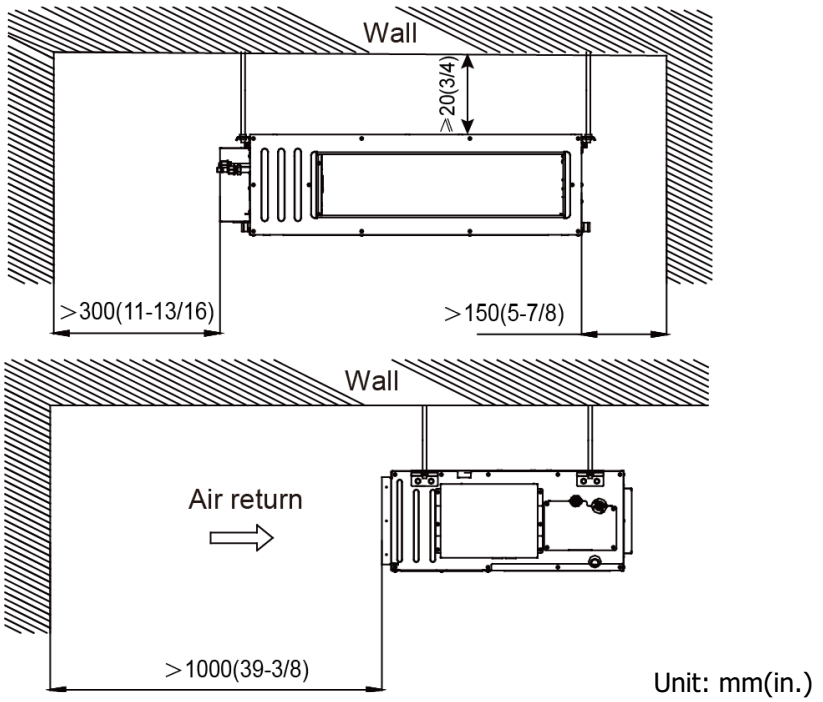

Fig 3.2.1

NOTICE
(1) Installation of the unit must be in accordance with National Electric Codes and local regulations.
(2) Improper installation will affect unit's performance, so do not install the unit by yourself. Please contact local dealer to arrange professional technicians for the installation.
(3) Do not connect power until all installation work is finished.

8.3 Wiring Requirements

(1) Power Cord Size and Air Switch Capacity

Model	Power Supply	Fuse Capacity(A)
AFH(09)DA-D3DNA1A/I	208/230V-1ph-60Hz	5
AFH(12)DA-D3DNA1A/I		5
AFH(18)DB-D3DNA1A/I		5
AFH(21)DB-D3DNA1A/I		5
AFH(24)DB-D3DNA1A/I		5

NOTICE
(1) Use copper wire only as unit's power cord. Operating temperature should be within it value.
(2) If the power cord is more than 15m (49-1/4 ft.) long, please increase properly the sectional area of power cord to avoid overload, which may cause accident.
(3) Above selection requirements: Power cord size is based on BV single-core wire (2~4pc) at 40°C(104°F) Cambient temperature when laying across plastic pipe. Air switch is D type and used at 40°C(104°F). If actual installation condition varies, please lower the capacity appropriately according to the specifications of power cord and air switch provided by manufacturer.
(4) Install cut-off device near the unit. The minimum distance between each stage of cut-off device should be 3mm(1/8 in.) (The same for both indoor unit and outdoor unit).

9. Installation Instructions

NOTICE!

These duct type indoor units are limited to be installed for one room.

9.1 Installation of Indoor Unit

9.1.1 Outline Dimension and Installation Spots

Equip with a inspection hatch after lifting the unit. For the convenience of maintenance, the service port should be on one side of the electric box and below unit's lower level.

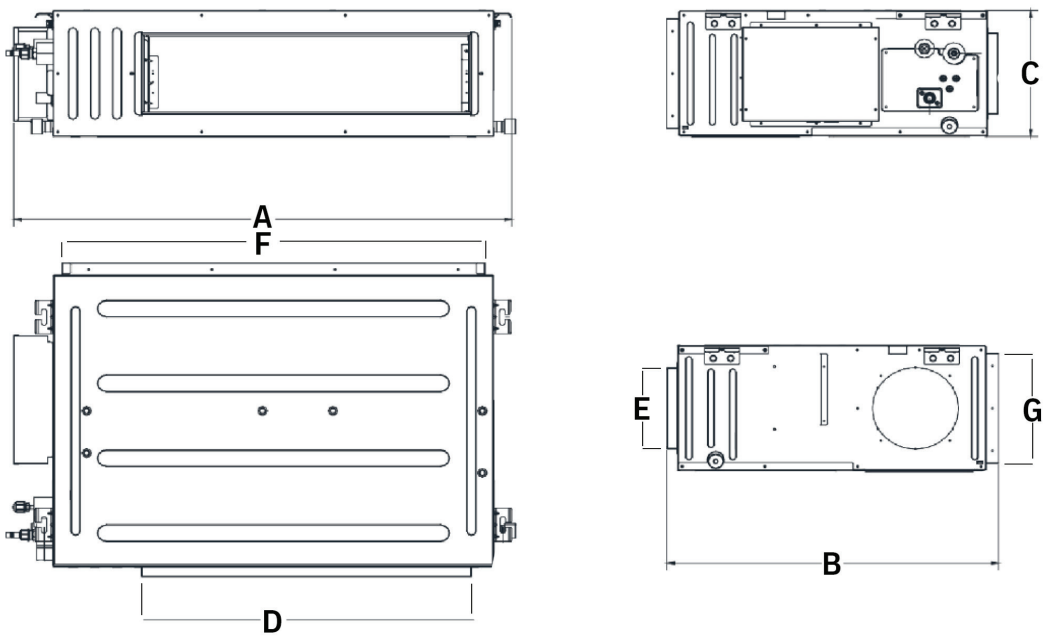

					Supply Measurements		Return Measurements	
Model	Unit	A	B	C	D	E	F	G
AFH(09)DA-D3DNA1A/I	in.	32-11/16	29-11/16	11-13/16	17-7/8	7-7/8	26	10-1/4
AFH(12)DA-D3DNA1A/I	in.							
AFH(18)DB-D3DNA1A/I	in.	44-1/2	29-11/16	11-13/16	29-3/4	7-3/4	37-3/4	10-3/4
AFH(21)DB-D3DNA1A/I	in.							
AFH(24)DB-D3DNA1A/I	in.							

9.1.2 Suspend the indoor unit

(1) Drill bolt holes and install bolts

1) Stick the reference cardboard on the installation position; drill 4 holes according to the hole site on the cardboard as shown in fig 4.1.3; diameter of drilling hole is according to the diameter of expansion bolt and the depth is 60-70mm(2-3/8~2-3/4 in.), as shown in fig 4.1.4.

Unit: mm(in.)

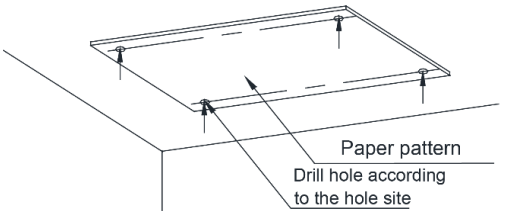

Fig 4.1.3

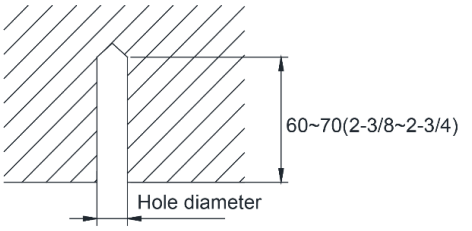

Fig 4.1.4

2) Insert the M10 expansion bolt into the hole and then knock the nail into the bolt, as shown in fig 4.1.5, and shown in fig 4.1.5, and then remove the paper pattern.

NOTICE!

The length of bolt depends on the installation height of the unit, bolts are field supplied.

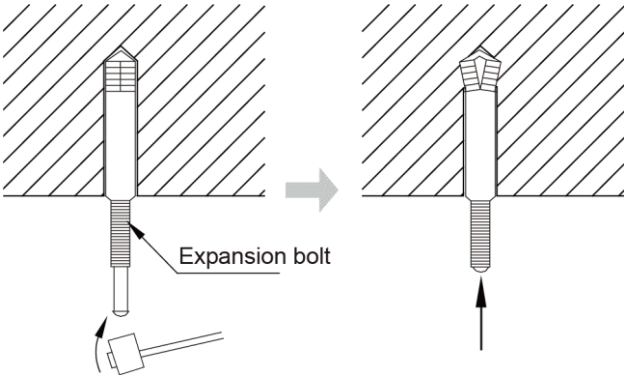

Fig 9.1.5

(2) Install the indoor unit temporarily

Assemble suspension bolt on the expansion bolt, attach the hanger bracket to the suspension bolt. Be sure to fix it securely by using a nut and washer from upper and lower sides of the hanger bracket. The washer fixing plate will prevent the washer from falling.

GFH(09)~(24)DA-D3DNA1A/I are as follows

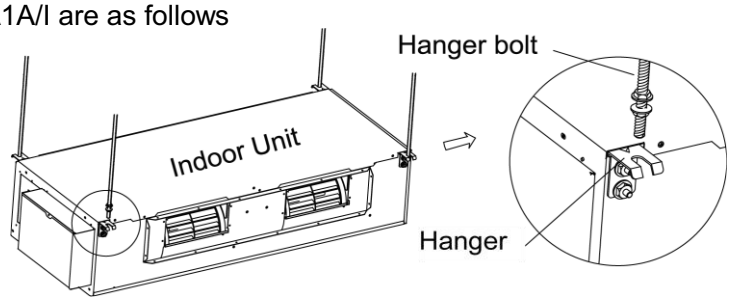

Fig 9.1.6

NOTICE!

1) Before operation, please prepare all pipelines (connection pipe, drainage hose) and wires (connection wire for wired controller, connection wire for indoor unit).

2) When drilling holes on ceiling (air return outlet or air outlet), you can need to reinforce the ceiling to prevent vibration. For detailes, please consult user or builder.

3) If the strength of the ceiling is not good, please install a beam bracket, and then put the unit on t he beam bracket.

(4) Adjust the unit to the right position.

(5) Check the level of the unit

After the indoor unit is installed, remember to check the horizontal status of the whole unit. It should be horizontal from front to back and slant 1% from left to right, following the drainage direction.

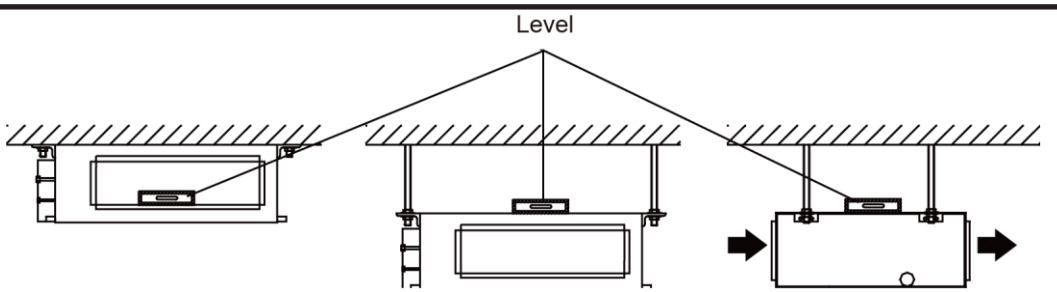

Fig9.1.8

(6) Remove the washer locating plate and then tighten the nut on it.

9.2 Refrigerant Pipe Connection

(1) Aim the flaring port of copper pipe at the center of screwed joint and then tighten the flaring nut with hand as shown in fig 9.2.1.

(2) Tighten the flaring nut with torque wrench.

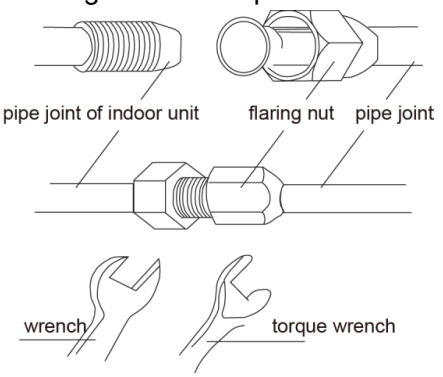

Fig 9.2.1

Torque for tightening nut

Pipe diameter mm(in.)	Torque(N・m)
Φ6.35(1/4)	15～30
Φ9.52(3/8)	35§ 40
Φ12.7(1/2)	45§ 50
Φ15.9(5/8)	60§ 65
Φ19.05(3/4)	70§ 75

(3) Use pipe bend when bending the pipe and the bending angle should not be too small.

(4) Wrap the connection pipe and joint with sponge and then tie them firmly with tape.

9.3 Drainage Pipe Installation and Drainage System Testing

9.3.1 Notice for Installation of Drain Pipe

(1) The drainage pipe should be short and the gradient downwards should be at least 1%~2% in order to drain condensation water smoothly.

(2) The diameter of drainage hose should be bigger or equal to the diameter of drainage pipe joint.

(3) Install drainage pipe according to the following fig and arrange insulation to the drainage pipe (Fig 9.3.1). Improper installation may lead to water leakage and damp the furniture and other things in the room.

(4) You can buy normal hard PVC pipe used as the drainage pipe. During connection, insert the end of PVC pipe into the drainage hole and then tighten it with drainage hole and wire binder. Can't connect the drainage hole and drainage hole with glue.

(5) When the drainage pipelines are used for several units, the position of pipeline should be about 100mm(4in）. lower than the drainage port of each unit. In this case, thicker pipes should be applied.

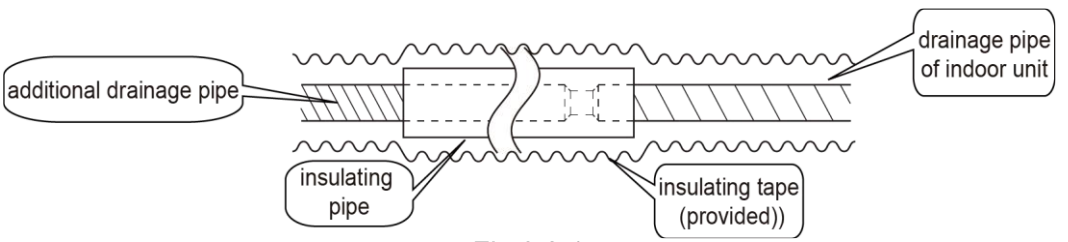

Fig 9.3.1

9.3.2 Drainage pipe installation

(1) Insert the drain hose into the drain hole and tighten it with tapes, as shown in Fig 9.3.2.

(2) Tighten the pipe clamp, with the distance between screw nut and hose smaller than 4mm(1/8in.).

① metal clamp(accessory) drain hose(accessory)

(3) Use sealing plate to make the pipe clamp and hose insulated, as shown in Fig.9.3.3.

Ø metal clamp(accessory)

thermal sponge(accessory)

Unit: mm(in.)

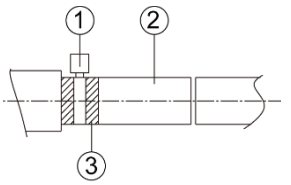

Fig 9.3.2

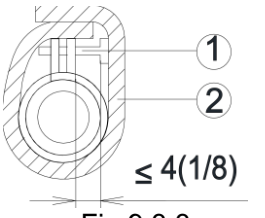

Fig 9.3.3

(4) When connecting several drain pipes, follow the instruction as indicated in Fig 9.3.4.

Choose the drain collecting pipe that matches with unit capacity.

Unit: mm(in.)

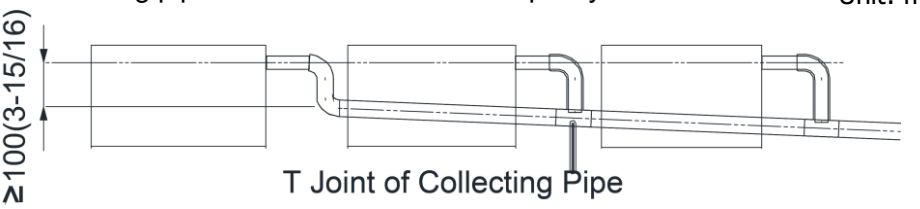

Fig 9.3.4

(5) Install the trap as shown in following Fig 9.3.5

(6) Install one trap for each unit.

(7) Convenience for cleaning trap in the future should be considered when installing it.

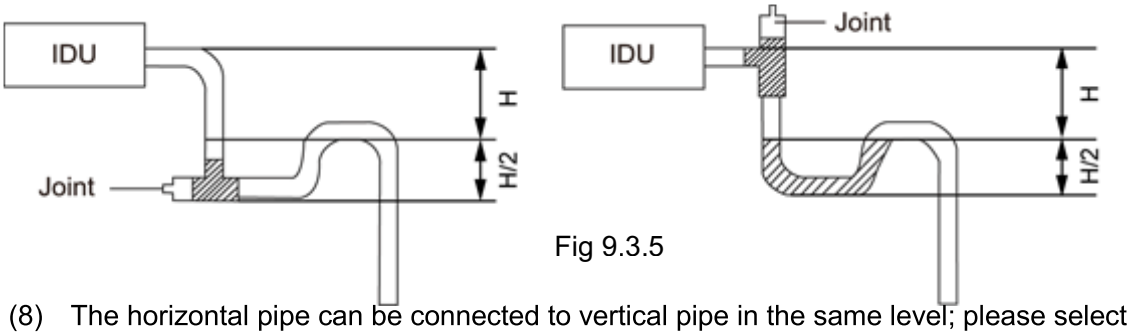

Fig 9.3.5

(8) The horizontal pipe can be connected to vertical pipe in the same level; please select the connection way as shown in following fig.

NO1: Connection of drainage pipe joints Fig 9.3.6

NO2: Connection of downspout elbow Fig 9.3.7

NO3: Inserting pipe connection Fig 9.3.8

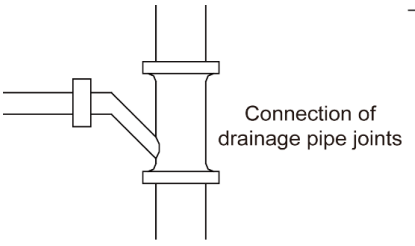

Fig 9.3.6

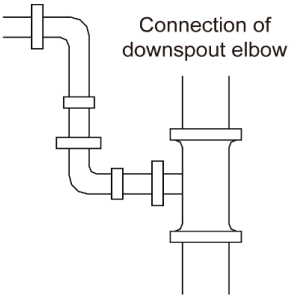

Fig 9.3.7

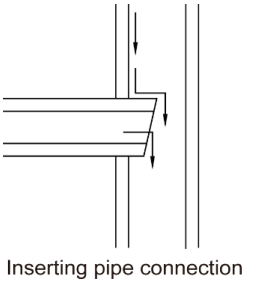

Fig 9.3.8

(9) The installation height of raising pipe for drainage should be lower thanB. The gradient from raising pipe towards drainage direction should be at least 1%~2%. If the raising pipe is vertical with the unit, the raising height should be less than C.

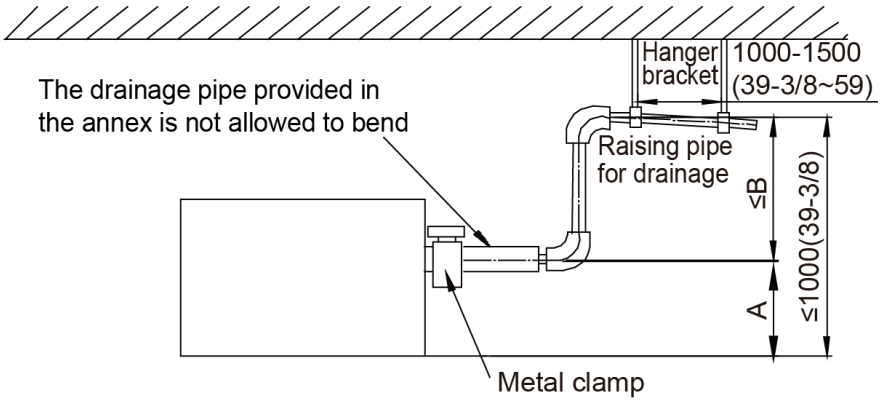

Unit: mm(in.)

Fig 9.3.9

Model	A	B	C
AFH(09)DA-D3DNA1A/I AFH(12)DA-D3DNA1A/I AFH(18)DB-D3DNA1A/I AFH(21)DB-D3DNA1A/I AFH(24)DB-D3DNA1A/I	150č 5-7/8G	850F 33-1/2G	800F 31-1/2G

(10) Drain pipes should have a downward slope of at least 1%~2%, in order to prevent pipes from sagging, install hanger bracket at intervals of 1000~1500mm(39-3/8~59 in.).

Unit: mm(in.)

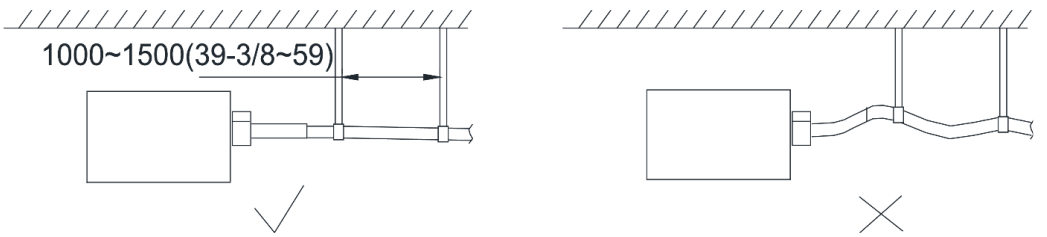

Fig 9.3.10

9.3.3 Test of Drainage System

◆ Models with water pump

(1) Please test drainage system after electric work is finished.

Inject approximately 1L purified water to drain pan from air vent, ensure that not to splash the water over the electrical components (e.g. water pump. etc.).

1) Spray 1L water on evaporator with sprayer.

2) In case of commissioning finished, please energize the IDUs and switch to cooling or dry mode, meanwhile, the water pump operates, you can check the draining through the transparent part of drain socket.

3) If communication wire is not connected, communication malfunction “E6” will occur after 3min of energizing. In this case, the water pump operates automatically. Check if the water pump drains normally drains normally drains normally through drainage port. The water pump will stop automatically after running for 1min

(2) During the test, please carefully check the drainage joint, make sure no any leakage occur.

(3) It is strongly recommend to do the drain test before ceiling decoration.

◆ Models without water pump

(1) Inject some water to the water tray of indoor unit as following:

1) Connect the drain hose to the other drain connection pipe of water tray and inject approximately 1L water. (Remove the drain hose after finishing testing and then put on the plug of water tray.)

2) Spray 1L water on evaporator with sprayer.

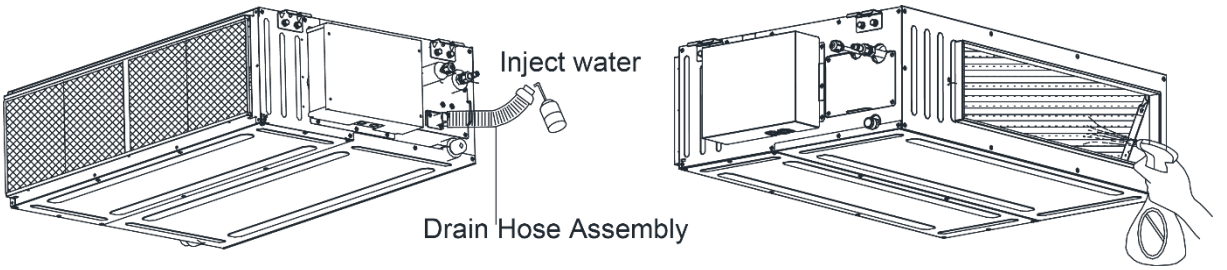

Fig 9.3.11

(2) Check if the water drains smoothly from the drain pipe and check if there is water leakage on the connection pipe.

(3) Arrange insulation of drain hose and pipe clamp after checking the drain system.

9.4 Installation of Air Duct

NOTICE!

① There should be insulating layer on air-out duct, air-return duct and fresh air duct to avoid heat loss and moisture. Adhere a nail on the air duct and then add thermal sponge with a layer of tin. Fasten it with a nail cover and then seal the junction with tin tapes. You can also use other materials that have good insulation quality.

② Each air-out duct and air-return duct should be fixed on a pre-made board with iron frame. The junction of air duct should be well-sealed in order to prevent air leakage.

③ The design and construction of air duct should comply with national requirements.

④ The edge of air-return duct is suggested to be more than 150mm(5-7/8 in.) away from the wall. Add a filter to the air-return opening.

⑤ Please consider noise-damping and vibration damping for the design and construction of air duct. Besides, noise source must be away from people. For instance, do not have the air-return opening installed on top of the user (Offices, rest area, etc.).

9.4.1 Shape and Size of Air Outlet and Air-return Opening

Unit: mm(in.)

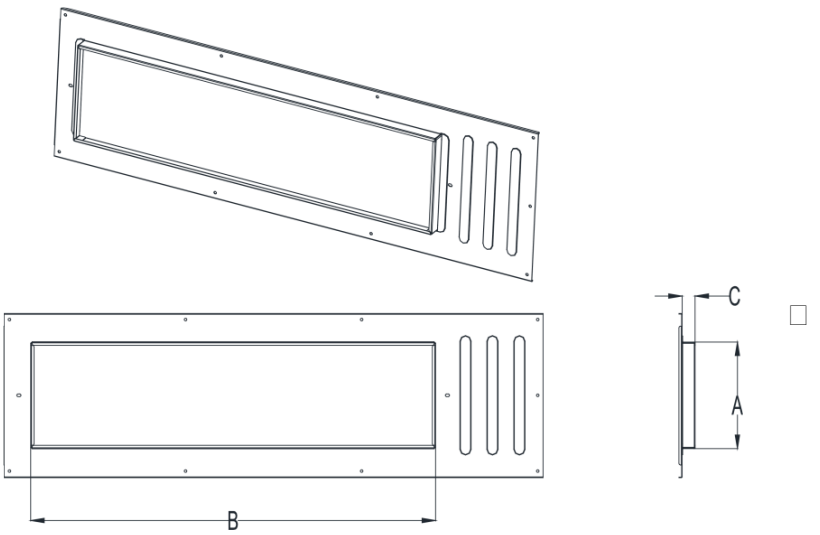

Fig 9.4.1 Air Outlet

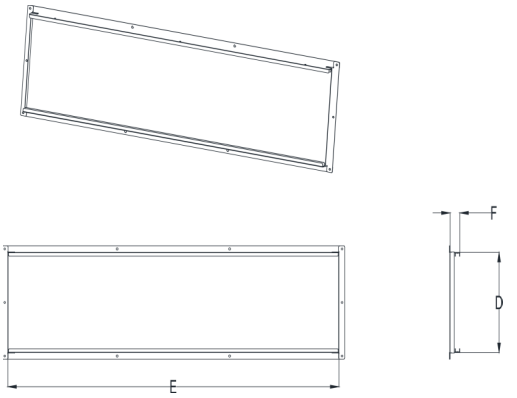

Fig 9.4.2 Air-return Opening

Model	Size of Air Outlet			Size of Air-return Opening		
	A	B	C	D	E	F
AFH(09)DA-D3DNA1A/I AFH(12)DA-D3DNA1A/I	195 (7-5/8)	451 (17-3/4)	25 (1)	264 (10-3/8)	660 (26)	29 (1-1/8)
AFH(18)DB-D3DNA1A/I AFH(21)DB-D3DNA1A/I AFH(24)DB-D3DNA1A/I	195 (7-5/8)	751 (29-9/16)	25 (1)	264 (10-3/8)	960 (37-3/4)	29 (1-1/8)

9.4.2 Installation of Air-out Duct

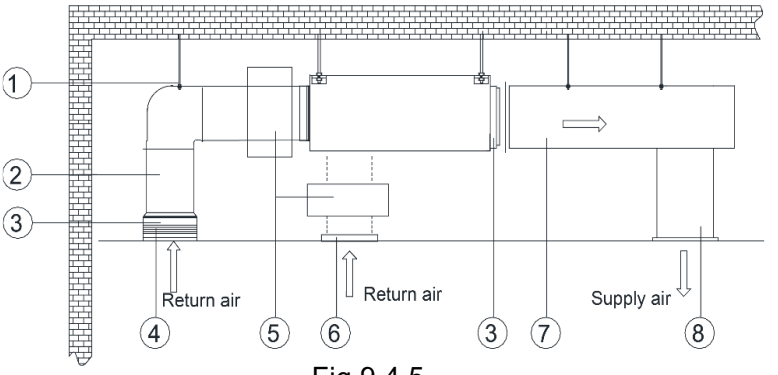

Fig 9.4.5

No.	Name	No.	Name
1	Hanger Rod	5	Static Pressure Box
2	Return Air Duct	6	Filter
3	Canvas Duct	7	Main Supply Air Duct
4	Return Air Inlet	8	Supply Air Outlet

9.4.3 Installation of the Return Air Duct

(1)The default installation location of the rectangular flange is at the back and the return air cover plate is at the bottom, as shown in Fig 4.4.6.

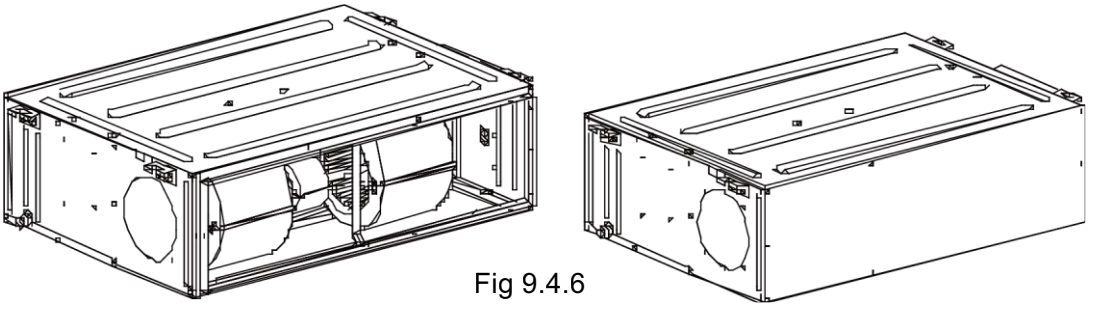

Fig 9.4.6

(2)If the bottom return air is desired, just change the place of the rectangular flange and the return air cover plate.

(3)Connect one end of the return air duct to the return air outlet of the unit by rivets and the other to the return air louver. For the sake of the convenience to freely adjust the height, a cutting of canvas duct will be helpful, which can be reinforced and folded by 8# iron wire.

(4)More noise is likely to be produced in the bottom return air mode than the rear return air mode, so it is suggestive to install a silencer and a static pressure box to minimize the noise.

(5)The installation method can be choosen with considering the conditions of the building and maintenance etc. as shown in Fig 9.4.7

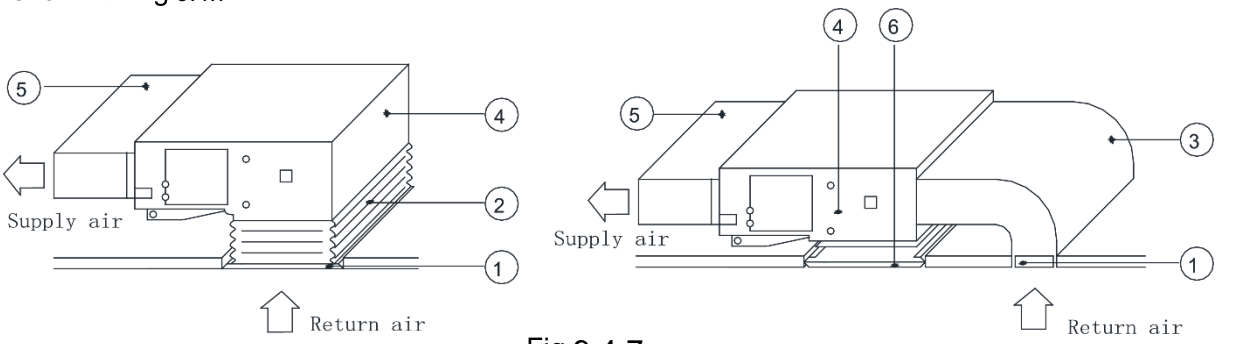

Fig 9.4.7

Table 5 Installation of the return air duct

No.	Name	No.	Name
1	Return Air Inlet (with filter)	4	Indoor unit
2	Canvas Duct	5	Supply Air Duct
3	Return Air Duct	6	Grille

9.4.4 Installation of the Fresh Air Pipe

(1)When the fresh air pipe is needed to be connected, cut the fresh air baffle as Fig 9.4.8
Plug up the gap of the fresh air baffle by sponge if the fresh air duct is not be used.

(2)Install the round flange so that the fresh air duct can be connected as Fig 9.4.9

(3)Sealing and heat preservation should be done for both the air pipe and round flange pipe.

(4)Fresh air should be treated via the air filter.

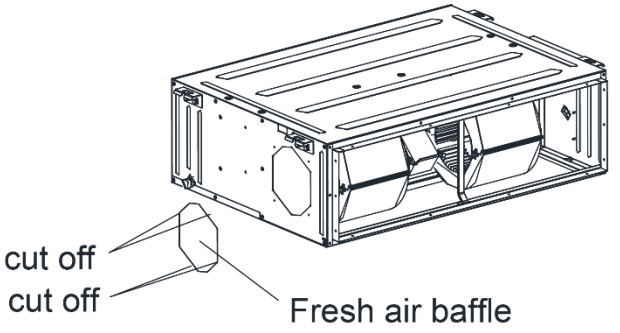

Fig 9.4.8

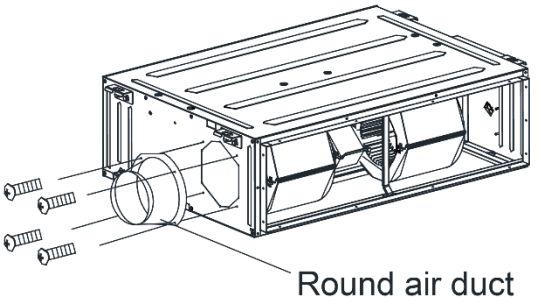

Fig 9.4.9

9.5 Installation of Wired Controller

Please refer to User Manual of Wired Controller for the installation details.

NOTICE! When installation is finished, the unit must be tested and debugged before operation. Please refer to Instruction Manual of ODU for auto addressing and debugging details.

10. Wiring Work

⚠WARNING

Before obtaining access to terminals, all supply circuits must be disconnected.

NOTICE
(1) Units must be earthed securely, or it may cause electric shock.
(2) Please carefully read the wiring diagram before carry out the wiring work, incorrect wiring could cause malfunction or even damage the unit.
(3) The unit should be powered by independent circuit and specific socket.
(4) The wiring should be in accordance with related regulations in order to ensure the units reliable running.
(5) Install circuit breaker for branch circuit according to related regulations and electrical standards.
(6) Keep cable away from refrigerant pipings, compressor and fan motor.
(7) The communication wires should be separated from power cord and connection wire between indoor unit
(8) Adjust the static pressure via wired controller according to site circumstance.

10.1 Connection of Wire and Patch Board Terminal

(1) The connection of wire (as shown in fig 10.0.1)

1) Strip about 25mm(1 in.) insulation of the wire end by stripping and cutting tool.
2) Remove the wiring screws on the terminal board.
3) Shape the tail of wire into ring by needle nose plier, and keep the gauge of ring in accordance with screw.
4) Use the screwdriver for tightening the terminal.

(2) The connection of stranded wire (as shown in fig 10.1.2)

1) Strip about 10mm (3/8 in.) insulation of the end of stranded wire by stripping and cutting tool.
2) Loosen the wiring screws on terminal board.
3) Insert the wire into the ring tongue terminal and tighten by crimping tool.
4) Use the screwdriver for tightening the terminal.

Unit: mm(in.)

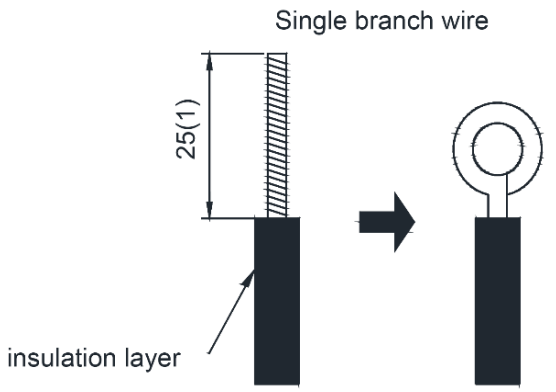

Fig 10.1.1

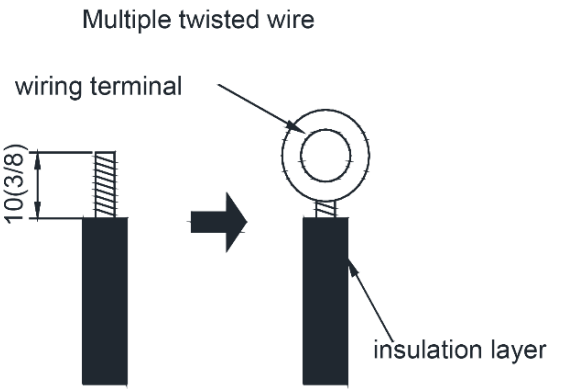

Fig 10.1.2

10.2 Power Cord Connection

NOTICE!

æ Every unit should be equipped with a circuit breaker for short-circuit and overload protection.

During operation, all indoor units connected to the same outdoor unit system must be kept energized status. Otherwise, the unit can't operate normally.

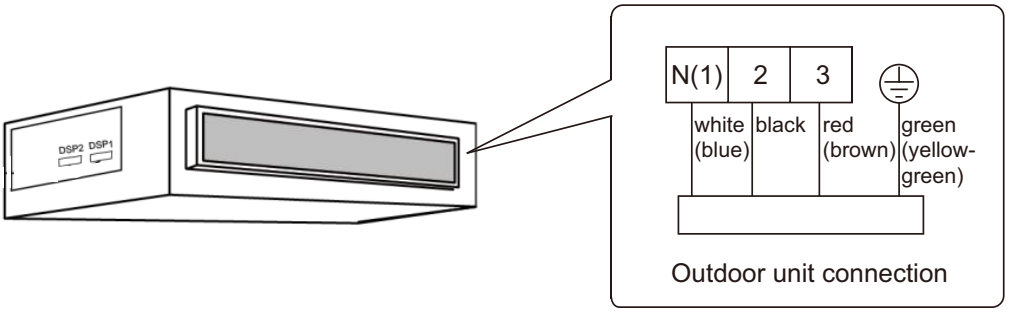

Fig 10.2.1

NOTICE!

Indoor unit quantity n is according to the outdoor unit capacity.

° For units with single-phase power supply.

(1) Detach the electric box lid.

(2) Let the power cord pass through the wiring through-holes.

(3) Fix the power card with wiring clamp.

(4) The wire diameter of power cord can' t be less than 18AWG.

11. Maintenance

11.1 Error Code List

NO.	Malfunction Name	Display Method of Indoor Unit				A/C status	Possible Causes
		Dual-8 Code Display	Indicator Display (during blinking, ON 0.5s and OFF 0.5s)				
			Operation Indicator	Cool Indicator	Heating Indicator		
1	High pressure protection of system	E1				During cooling and drying operation, except indoor fan operates, all loads stop operation. During heating operation, the complete unit stops.	Possible reasons: 1. Refrigerant was superabundant; 2. Poor heat exchange (including filth blockage of heat exchanger and bad radiating environment); Ambient temperature is too high.
2	Antifreezing protection	E2				During cooling and drying operation, compressor and outdoor fan stop while indoor fan operates.	1. Poor air-return in indoor unit; 2. Fan speed is abnormal; 3. Evaporator is dirty.
3	System block or refrigerant leakage	E3				The Dual-8 Code Display will show E3 until the low pressure switch stop operation.	1.Low-pressure protection 2.Low-pressure protection of system 3.Low-pressure protection of compressor
4	High discharge temperature protection of compressor	E4				During cooling and drying operation, compressor and outdoor fan stop while indoor fan operates. During heating operation, all loads stop.	Please refer to the malfunction analysis (discharge protection, overload).
5	Overcurrent protection	E5				During cooling and drying operation, compressor and outdoor fan stop while indoor fan operates. During heating operation, all loads stop.	1. Supply voltage is unstable; 2. Supply voltage is too low and load is too high; 3. Evaporator is dirty.
6	Communi-cation Malfunction	E6				During cooling operation, compressor stops while indoor fan motor operates. During heating operation, the complete unit stops.	Refer to the corresponding malfunction analysis.
7	High temperature resistant protection	E8				During cooling operation: compressor will stop while indoor fan will operate. During heating operation, the complete unit stops.	Refer to the malfunction analysis (overload, high temperature resistant).
8	EEPROM malfunction	EE				During cooling and drying operation, compressor will stop while indoor fan will operate; During heating operation, the complete unit will stop	Replace outdoor control panel AP1
9	Limit/ decrease frequency due to high temperature of module	EU				All loads operate normally, while operation frequency for compressor is decreased	Discharging after the complete unit is de-energized for 20mins, check whether the thermal grease on IPM Module of outdoor control panel AP1 is sufficient and whether the radiator is inserted tightly. If its no use, please replace control panel AP1.
10	Malfunction protection of jumper cap	C5				Wireless remote receiver and button are effective, but can not dispose the related command	1. No jumper cap insert on mainboard. 2. Incorrect insert of jumper cap. 3. Jumper cap damaged. 4. Abnormal detecting circuit of mainboard.

NO.	Malfunction Name	Display Method of Indoor Unit				A/C status	Possible Causes
		Dual-8 Code Display	Indicator Display (during blinking, ON 0.5s and OFF 0.5s)				
			Operation Indicator	Cool Indicator	Heating Indicator		
11	Gathering refrigerant	F0				When the outdoor unit receive signal of Gathering refrigerant ,the system will be forced to run under cooling mode for gathering refrigerant	Nominal cooling mode
12	Indoor ambient temperature sensor is open/short circuited	F1				During cooling and drying operation, indoor unit operates while other loads will stop; during heating operation, the complete unit will stop operation.	1. Loosening or bad contact of indoor ambient temp. sensor and mainboard terminal. 2. Components in mainboard fell down leads short circuit. 3. Indoor ambient temp. sensor damaged.(check with sensor resistance value chart) 4. Mainboard damaged.
13	Indoor evaporator temperature sensor is open/short circuited	F2				AC stops operation once reaches the setting temperature. Cooling, drying: internal fan motor stops operation while other loads stop operation; heating: AC stop operation	1. Loosening or bad contact of Indoor evaporator temp. sensor and mainboard terminal. 2. Components on the mainboard fall down leads short circuit. 3. Indoor evaporator temp. sensor damaged.(check temp. sensor value chart for testing) 4. Mainboard damaged.
14	Outdoor ambient temperature sensor is open/short circuited	F3				During cooling and drying operating, compressor stops while indoor fan operates; During heating operation, the complete unit will stop operation	Outdoor temperature sensor hasnt been connected well or is damaged. Please check it by referring to the resistance table for temperature sensor)
15	Outdoor condenser temperature sensor is open/short circuited	F4				During cooling and drying operation, compressor stops while indoor fan will operate; During heating operation, the complete unit will stop operation.	Outdoor temperature sensor hasnt been connected well or is damaged. Please check it by referring to the resistance table for temperature sensor)
16	Outdoor discharge temperature sensor is open/short circuited	F5				During cooling and drying operation, compressor will sop after operating for about 3 mins, while indoor fan will operate; During heating operation, the complete unit will stop after operating for about 3 mins.	1.Outdoor temperature sensor hasnt been connected well or is damaged. Please check it by referring to the resistance table for temperature sensor) 2.The head of temperature sensor hasnt been inserted into the copper tube
17	Limit/ decrease frequency due to overload	F6				All loads operate normally, while operation frequency for compressor is decreased	Refer to the malfunction analysis (overload, high temperature resistant)
18	Decrease frequency due to overcurrent	F8				All loads operate normally, while operation frequency for compressor is decreased	The input supply voltage is too low; System pressure is too high and overload

NO.	Malfunction Name	Display Method of Indoor Unit				A/C status	Possible Causes
		Dual-8 Code Display	Indicator Display (during blinking, ON 0.5s and OFF 0.5s)				
			Operation Indicator	Cool Indicator	Heating Indicator		
19	Decrease frequency due to high air discharge	F9				All loads operate normally, while operation frequency for compressor is decreased	Overload or temperature is too high; Refrigerant is insufficient; Malfunction of electric expansion valve (EKV)
20	Limit/ decrease frequency due to antifreezing	FH				All loads operate normally, while operation frequency for compressor is decreased	Poor air-return in indoor unit or fan speed is too low
21	Voltage for DC bus-bar is too high	PH				During cooling and drying operation, compressor will stop while indoor fan will operate; During heating operation, the complete unit will stop operation.	1. Measure the voltage of position L and N on wiring board (XT), if the voltage is higher than 265VAC, turn on the unit after the supply voltage is increased to the normal range. 2.If the AC input is normal, measure the voltage of electrolytic capacitor C on control panel (AP1), if its normal, theres malfunction for the circuit, please replace the control panel (AP1)
22	Voltage of DC bus-bar is too low	PL				During cooling and drying operation, compressor will stop while indoor fan will operate; During heating operation, the complete unit will stop	1. Measure the voltage of position L and N on wiring board (XT), if the voltage is higher than 150VAC, turn on the unit after the supply voltage is increased to the normal range. 2.If the AC input is normal, measure the voltage of electrolytic capacitor C on control panel (AP1), if its normal, theres malfunction for the circuit, please replace the control panel (AP1)
23	Compressor Min frequence in test state	P0					Showing during min. cooling or min. heating test
24	Compressor rated frequence in test state	P1					Showing during nominal cooling or nominal heating test
25	Compressor maximum frequence in test state	P2					Showing during max. cooling or max. heating test

NO.	Malfunction Name	Display Method of Indoor Unit				A/C status	Possible Causes
		Dual-8 Code Display	Indicator Display (during blinking, ON 0.5s and OFF 0.5s)				
			Operation Indicator	Cool Indicator	Heating Indicator		
26	Compressor intermediate frequence in test state	P3					Showing during middle cooling or middle heating test
27	Overcurrent protection of phase current for compressor	P5				During cooling and drying operation, compressor will stop while indoor fan will operate; During heating operation, the complete unit will stop operation.	Refer to the malfunction analysis (IPM protection, loss of synchronism protection and overcurrent protection of phase current for compressor.
28	Charging malfunction of capacitor	PU				During cooling and drying operation, compressor will stop while indoor fan will operate; During heating operation, the complete unit will stop	Refer to the part three—charging malfunction analysis of capacitor
29	Malfunction of module temperature sensor circuit	P7				During cooling and drying operation, compressor will stop while indoor fan will operate; During heating operation, the complete unit will stop	Replace outdoor control panel AP1
30	Module high temperature protection	P8				During cooling operation, compressor will stop while indoor fan will operate; During heating operation, the complete unit will stop	After the complete unit is de-energized for 20mins, check whether the thermal grease on IPM Module of outdoor control panel AP1 is sufficient and whether the radiator is inserted tightly. If its no use, please replace control panel AP1.
31	Overload protection for compressor	H3				During cooling and drying operation, compressor will stop while indoor fan will operate; During heating operation, the complete unit will stop operation.	1. Wiring terminal OVC-COMP is loosened. In normal state, the resistance for this terminal should be less than 1ohm. 2.Refer to the malfunction analysis (discharge protection, overload)
32	IPM protection	H5				During cooling and drying operation, compressor will stop while indoor fan will operate; During heating operation, the complete unit will stop operation.	Refer to the malfunction analysis (IPM protection, loss of synchronism protection and overcurrent protection of phase current for compressor.

NO.	Malfunction Name	Display Method of Indoor Unit				A/C status	Possible Causes
		Dual-8 Code Display	Indicator Display (during blinking, ON 0.5s and OFF 0.5s)				
			Operation Indicator	Cool Indicator	Heating Indicator		
33	Internal motor (fan motor) do not operate	H6				Internal fan motor, external fan motor, compressor and electric heater stop operation,guide louver stops at present location.	1. Bad contact of DC motor feedback terminal. 2. Bad contact of DC motor control end. 3. Fan motor is stalling. 4. Motor malfunction. 5. Malfunction of mainboard rev detecting circuit.
34	Desynchro-nizing of compressor	H7				During cooling and drying operation, compressor will stop while indoor fan will operate; During heating operation, the complete unit will stop operation.	Refer to the malfunction analysis (IPM protection, loss of synchronism protection and overcurrent protection of phase current for compressor.
35	PFC protection	HC				During cooling and drying operation, compressor will stop while indoor fan will operate; During heating operation, the complete unit will stop operation.	Refer to the malfunction analysis
36	Outdoor DC fan motor malfunction	L3				Outdoor DC fan motor malfunction lead to compressor stop operation,	DC fan motor malfunction or system blocked or the connector loosed
37	power protection	L9				compressor stop operation and Outdoor fan motor will stop 30s latter , 3 minutes latter fan motor and compressor will restart	To protect the electronical components when detect high power
38	Indoor unit and outdoor unit doesnt match	LP				compressor and Outdoor fan motor cant work	Indoor unit and outdoor unit doesnt match
39	Failure start-up	LC				During cooling and drying operation, compressor will stop while indoor fan will operate; During heating operation, the complete unit will stop operation.	Refer to the malfunction analysis
40	Normal communica-tion						
41	Defrosting				OFF 3S and blink once (during blinking, ON 10s and OFF 0.5s)	Defrosting will occur in heating mode. Compressor will operate while indoor fan will stop operation.	Its the normal state

NO.	Malfunction Name	Display Method of Indoor Unit				A/C status	Possible Causes
		Dual-8 Code Display	Indicator Display (during blinking, ON 0.5s and OFF 0.5s)				
			Operation Indicator	Cool Indicator	Heating Indicator		
42	Malfunction of phase current detection circuit for compressor	U1				During cooling and drying operation, compressor will stop while indoor fan will operate; During heating operation, the complete unit will stop	Replace outdoor control panel AP1
43	Malfunction of voltage dropping for DC bus-bar	U3				During cooling and drying operation, compressor will stop while indoor fan will operate; During heating operation, the complete unit will stop	Supply voltage is unstable
44	Malfunction of complete units current detection	U5				During cooling and drying operation, the compressor will stop while indoor fan will operate; During heating operating, the complete unit will stop operation.	Theres circuit malfunction on outdoor units control panel AP1, please replace the outdoor units control panel AP1.
45	The four-way valve is abnormal	U7				If this malfunction occurs during heating operation, the complete unit will stop operation.	1.Supply voltage is lower than AC175V; 2.Wiring terminal 4V is loosened or broken; 3.4V is damaged, please replace 4V.
46	Frequency limiting (power)						
47	Compressor is open-circuited						
48	The temperature for turning on the unit is reached						
49	Frequency limiting (module temperature)						
50	Water overflow protection	E9				The complete unit stops	If the condition of full of water is detected for 8s, water overflow protection will be enabled and wired controller will display E9 and give an alarm; in each mode, if system enters water overflow protection, indoor units will shut down except the water pump and alarm. The capacity output of outdoor units should be adjusted correspondingly.

If malfunction occurs,corresponding code will display and the unit will resume normal until protection or malfunction disappears.

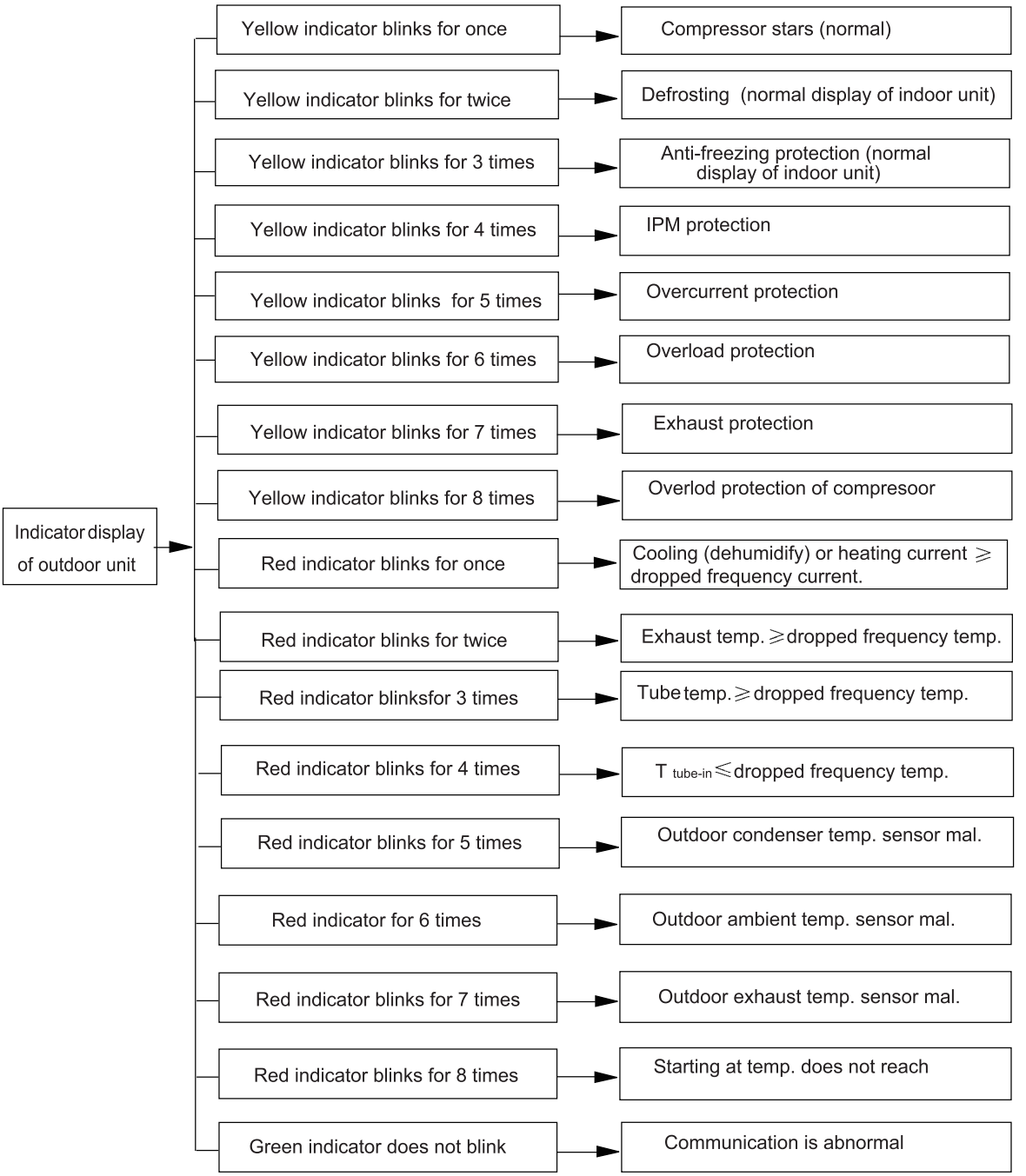

Analysis or processing of some of the malfunction display:

1. Compressor discharge protection

Possible causes: shortage of refrigerant; blockage of air filter; poor ventilation or air flow short pass for condenser; the system has noncondensing gas (such as air, water etc.); blockage of capillary assy (including filter); leakage inside four-way valve causes incorrect operation; malfunction of compressor; malfunction of protection relay; malfunction of discharge sensor; outdoor temperature too high.

Processing method: refer to the malfunction analysis in the above section.

2. Low voltage overcurrent protection

Possible cause: Sudden drop of supply voltage.

3. Communication malfunction

Processing method: Check if communication signal cable is connected reliably.

4. Sensor open or short circuit

Processing method: Check whether sensor is normal, connected with the corre sponding position on the controller and if damage of lead wire is found.

5. Compressor over load protection

Possible causes: insufficient or too much refrigrant; blockage of capillary and increase of suction temp.; improper running of compressor, burning in or stuck of bearing, damage of discharge valve; malfunction of protector.

Processing method: adjust refrigerant amount; replace the capillary; replace the compressor; use universal meter to check if the contactor of compress or is fine when it is not overheated, if not replace the protector.

6. System malfunction

i.e.overload protection.When tube temperature(Check the temperature of outdoor heat exchanger when cooling and check the temperatur e of indoor heat exchanger when heating) is too high, protection will be activated.

Possible causes: Outdoor temperature is too high when cooling; insufficient outdoor air circulation; refrigerant flow malfunction.

please refer to the malfunction analysis in the previous section for handling method .

7. IPM module protection

Processing method:Once the module malfunction happens,if it persists for a long time and can not be selfcanceled, cut off the power and turn off the unit,and then re-energize the unit again after about 10 min.After repeating the procedure for sever times, if the malfunction still exists,replace the module.

11.2 Troubleshooting for Main Malfunction

Indoor unit:

1. Malfunction of Temperature Sensor F1, F2

Main detection points:

- Is the wiring terminal between the temperature sensor and the controller loosened or poorly contacted?
- Is there short circuit due to trip-over of the parts?
- Is the temperature sensor broken?
- Is mainboard broken?

Malfunction diagnosis process:

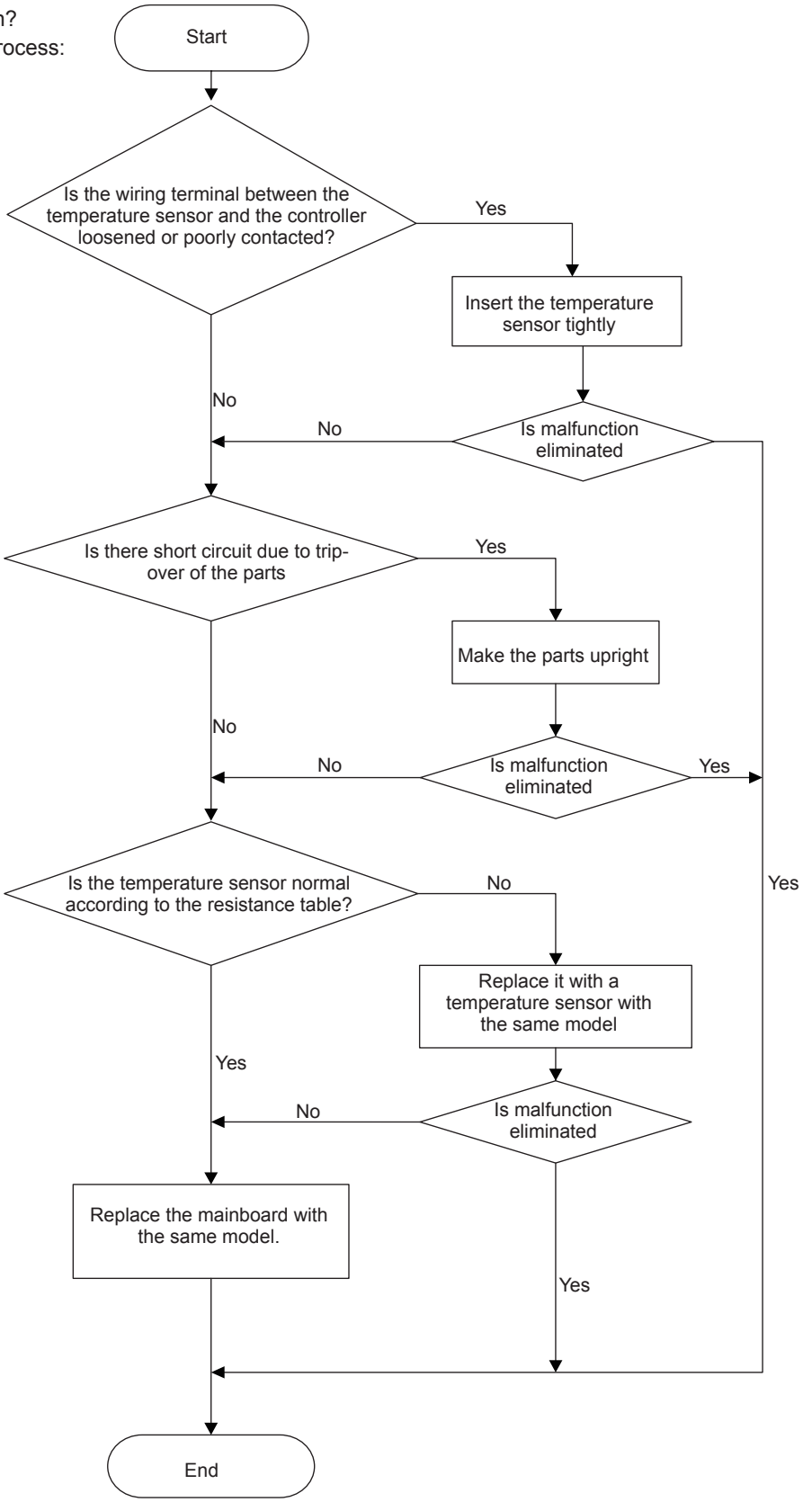

2. Malfunction of Blocked Protection of IDU Fan Motor H6

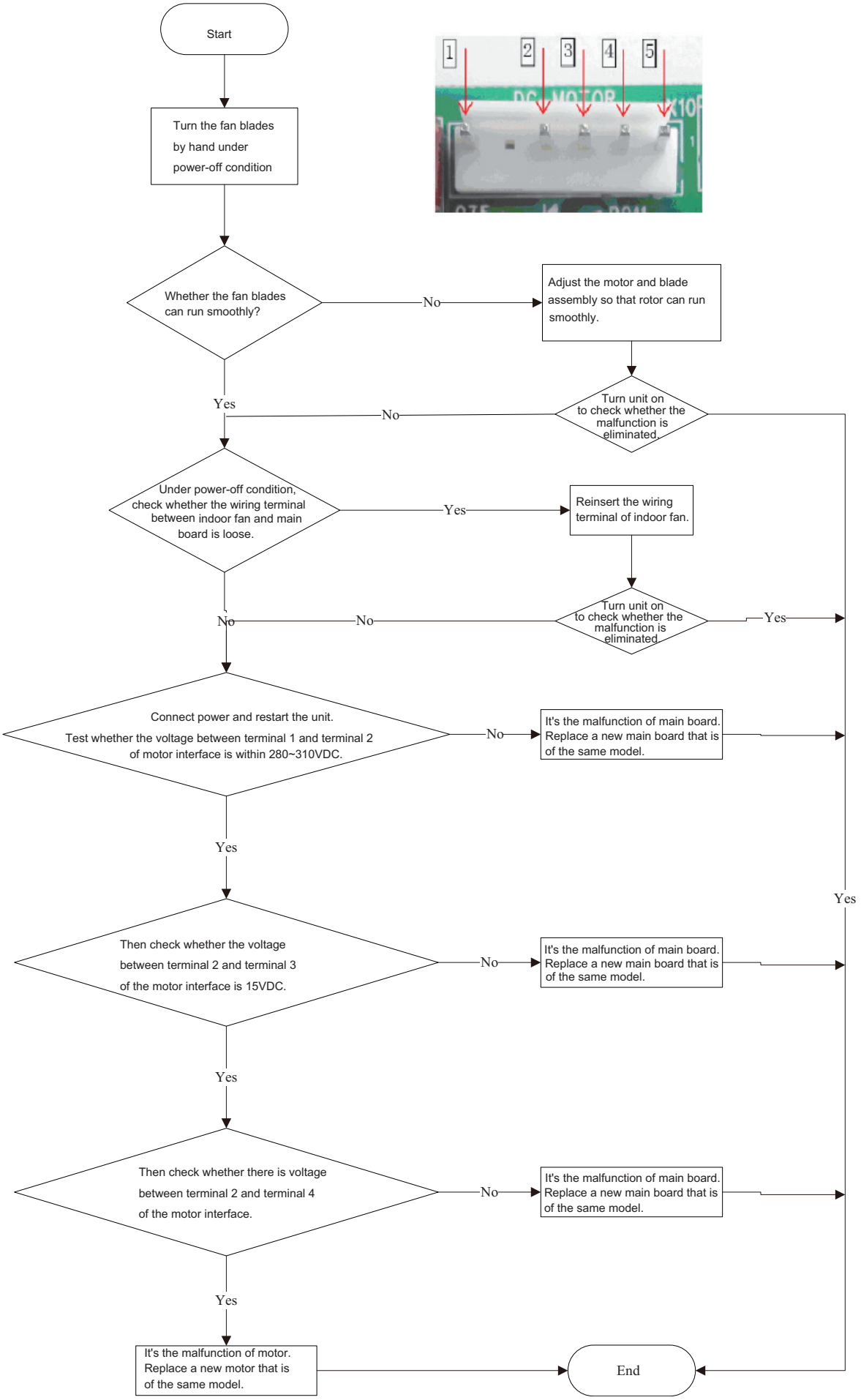

3. Malfunction of Protection of Jumper Cap C5

Main detection points:

- Is there jumper cap on the mainboard?
- Is the jumper cap inserted correctly and tightly?
- The jumper is broken?
- Detectioncircuit of the mainboard isdefined abnormal?

Malfunction diagnosis process:

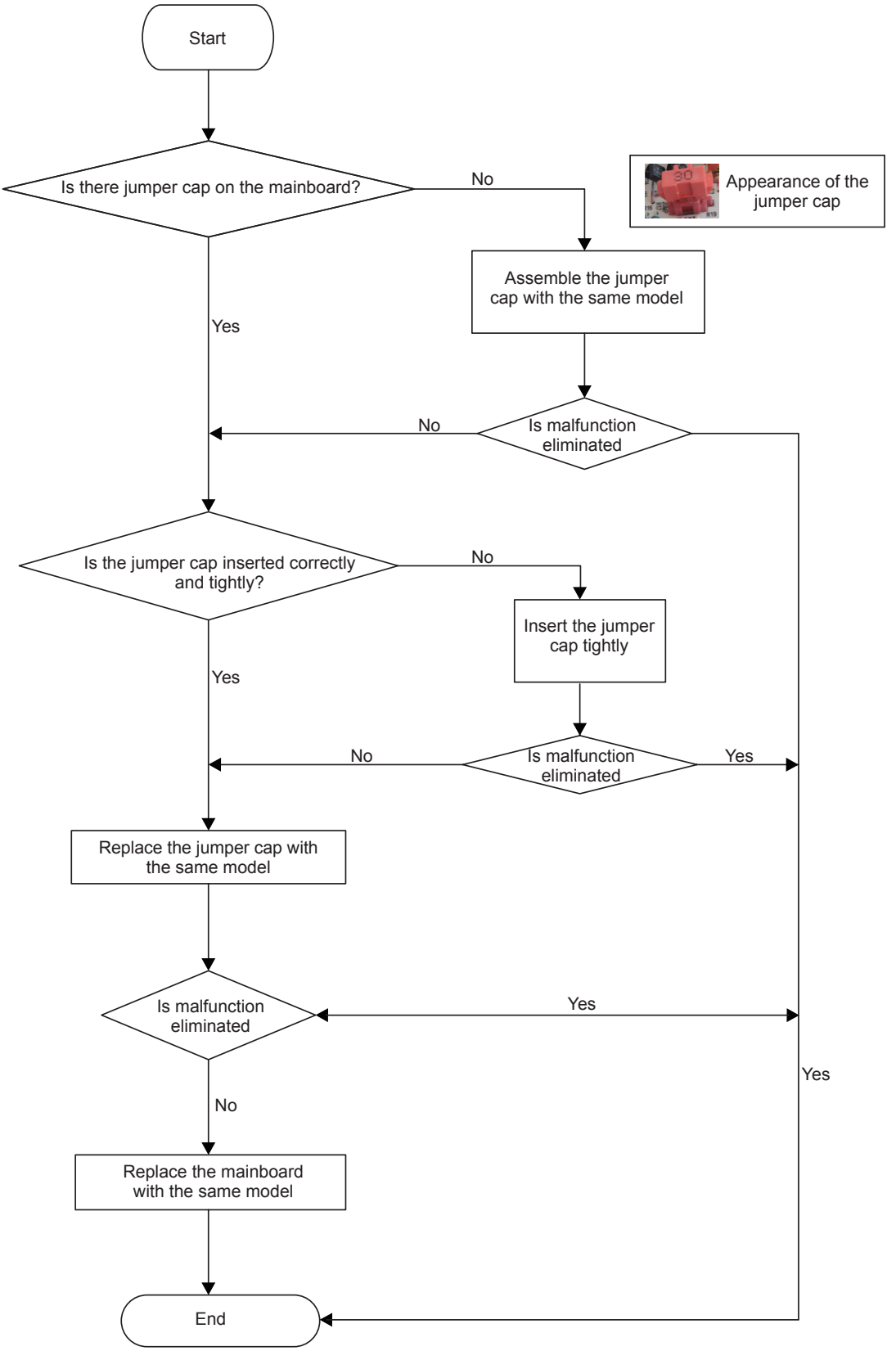

4. Water overflow protection E9

Malfunction diagnosis process:

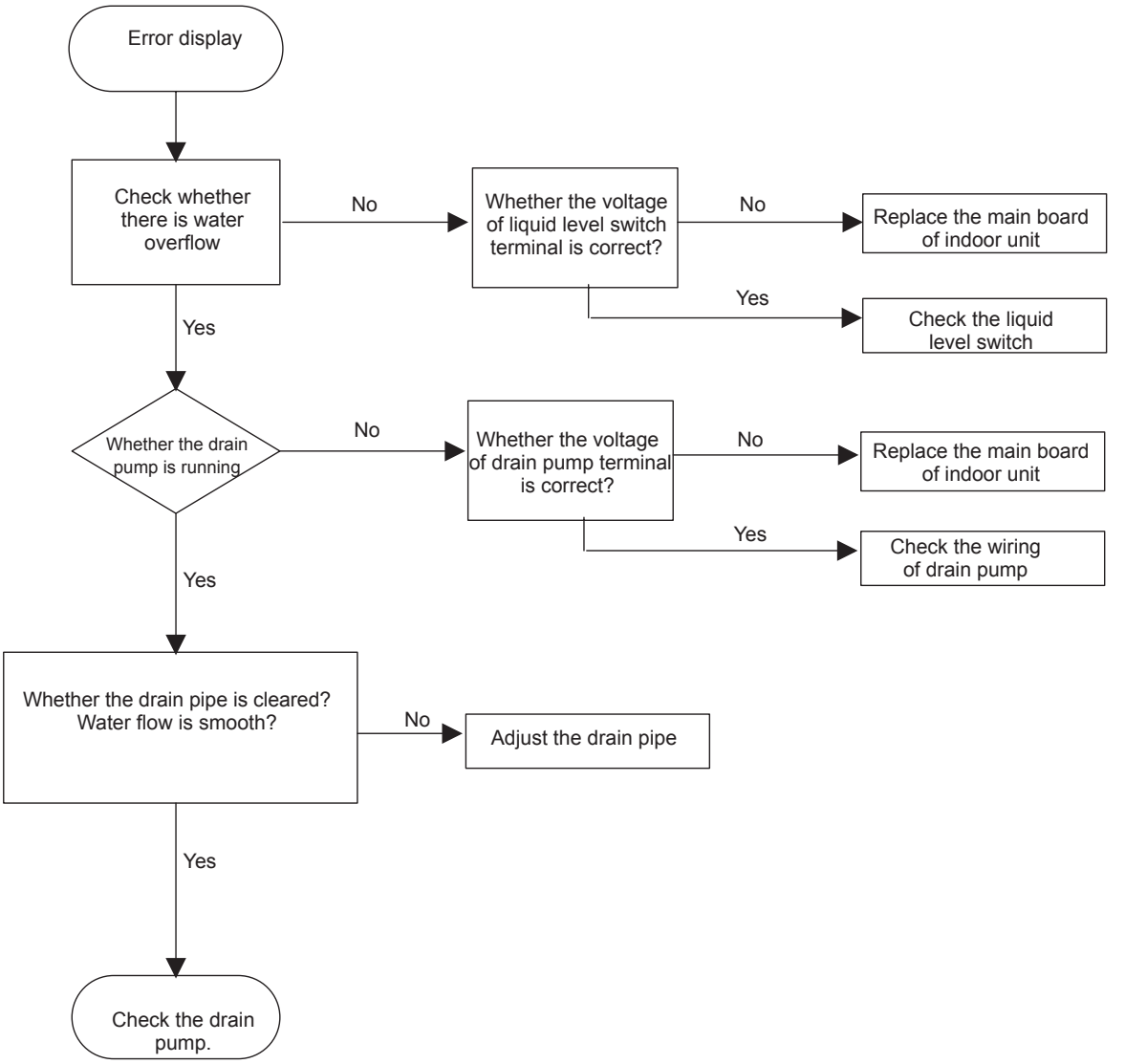

11.3 Maintenance Method for Normal Malfunction

1. Air Conditioner Cant be Started Up

Possible Causes	Discriminating Method (Air conditioner Status)	Troubleshooting
No power supply, or poor connection for power plug	After energization, operation indicator isnt bright and the buzzer cant give out sound	Confirm whether its due to power failure. If yes, wait for power recovery. If not, check power supply circuit and make sure the power plug is connected well.
Wrong wire connection between indoor unit and outdoor unit, or poor connection for wiring terminals	Under normal power supply circumstances, operation indicator isnt bright after energization	Check the circuit according to circuit diagram and connect wires correctly. Make sure all wiring terminals are connected firmly
Electric leakage for air conditioner	After energization, room circuit breaker trips off at once	Make sure the air conditioner is grounded reliably Make sure wires of air conditioner is connected correctly Check the wiring inside air conditioner. Check whether the insulation layer of power cord is damaged; if yes, place the power cord.
Model selection for air switch is improper	After energization, air switch trips off	Select proper air switch
Malfunction of remote controller	After energization, operation indicator is bright, while no display on remote controller or buttons have no action.	Replace batteries for remote controller Repair or replace remote controller

2. Poor Cooling (Heating) for Air Conditioner

Possible Causes	Discriminating Method (Air conditioner Status)	Troubleshooting
Set temperature is improper	Observe the set temperature on remote controller	Adjust the set temperature
Rotation speed of the IDU fan motor is set too low	Small wind blow	Set the fan speed at high or medium
Filter of indoor unit is blocked	Check the filter to see its blocked	Clean the filter
Installation position for indoor unit and outdoor unit is improper	Check whether the installation postion is proper according to installation requirement for air conditioner	Adjust the installation position, and install the rainproof and sunproof for outdoor unit
Refrigerant is leaking	Discharged air temperature during cooling is higher than normal discharged wind temperature; Discharged air temperature during heating is lower than normal discharged wind temperature; Units pressure is much lower than regulated range	Find out the leakage causes and deal with it. Add refrigerant.
Malfunction of 4-way valve	Blow cold wind during heating	Replace the 4-way valve
Malfunction of capillary	Discharged air temperature during cooling is higher than normal discharged wind temperature; Discharged air temperature during heating is lower than normal discharged wind temperature; Unitt pressure is much lower than regulated range. If refrigerant isnt leaking, part of capillary is blocked	Replace the capillary
Flow volume of valve is insufficient	The pressure of valves is much lower than that stated in the specification	Open the valve completely
Malfunction of horizontal louver	Horizontal louver cant swing	Refer to point 3 of maintenance method for details
Malfunction of the IDU fan motor	The IDU fan motor cant operate	Refer to troubleshooting for H6 for maintenance method in details
Malfunction of the ODU fan motor	The ODU fan motor cant operate	Refer to point 4 of maintenance method for details
Malfunction of compressor	Compressor cant operate	Refer to point 5 of maintenance method for details

3. Horizontal Louver Cant Swing

Possible Causes	Discriminating Method (Air conditioner Status)	Troubleshooting
Wrong wire connection, or poor connection	Check the wiring status according to circuit diagram	Connect wires according to wiring diagram to make sure all wiring terminals are connected firmly
Stepping motor is damaged	Stepping motor cant operate	Repair or replace stepping motor
Main board is damaged	Others are all normal, while horizontal louver cant operate	Replace the main board with the same model

4. ODU Fan Motor Cant Operate

Possible causes	Discriminating method (air conditioner status)	Troubleshooting
Wrong wire connection, or poor connection	Check the wiring status according to circuit diagram	Connect wires according to wiring diagram to make sure all wiring terminals are connected firmly
Capacity of the ODU fan motor is damaged	Measure the capacity of fan capacitor with an universal meter and find that the capacity is out of the deviation range indicated on the nameplate of fan capacitor.	Replace the capacity of fan
Power voltage is a little low or high	Use universal meter to measure the power supply voltage. The voltage is a little high or low	Suggest to equip with voltage regulator
Motor of outdoor unit is damaged	When unit is on, cooling/heating performance is bad and ODU compressor generates a lot of noise and heat.	Change compressor oil and refrigerant. If no better, replace the compressor with a new one

5. Compressor Cant Operate

Possible causes	Discriminating method (air conditioner status)	Troubleshooting
Wrong wire connection, or poor connection	Check the wiring status according to circuit diagram	Connect wires according to wiring diagram to make sure all wiring terminals are connected firmly
Capacity of compressor is damaged	Measure the capacity of fan capacitor with an universal meter and find that the capacity is out of the deviation range indicated on the nameplate of fan capacitor.	Replace the compressor capacitor
Power voltage is a little low or high	Use universal meter to measure the power supply voltage. The voltage is a little high or low	Suggest to equip with voltage regulator
Coil of compressor is burnt out	Use universal meter to measure the resistance between compressor terminals and its 0	Repair or replace compressor
Cylinder of compressor is blocked	Compressor cant operate	Repair or replace compressor

6. Air Conditioner is Leaking

Possible causes	Discriminating method (air conditioner status)	Troubleshooting
Drain pipe is blocked	Water leaking from indoor unit	Eliminate the foreign objects inside the drain pipe
Drain pipe is broken	Water leaking from drain pipe	Replace drain pipe
Wrapping is not tight	Water leaking from the pipe connection place of indoor unit	Wrap it again and bundle it tightly

7. Abnormal Sound and Vibration

Possible causes	Discriminating method (air conditioner status)	Troubleshooting
When turn on or turn off the unit, the panel and other parts will expand and theres abnormal sound	Theres the sound of "PAPA"	Normal phenomenon. Abnormal sound will disappear after a few minutes.
When turn on or turn off the unit, theres abnormal sound due to flow of refrigerant inside air conditioner	Water-running sound can be heard	Normal phenomenon. Abnormal sound will disappear after a few minutes.
Foreign objects inside the indoor unit or therere parts touching together inside the indoor unit	Theres abnormal sound fro indoor unit	Remove foreign objects. Adjust all parts position of indoor unit, tighten screws and stick damping plaster between connected parts
Foreign objects inside the outdoor unit or therere parts touching together inside the outdoor unit	Theres abnormal sound fro outdoor unit	Remove foreign objects. Adjust all parts position of outdoor unit, tighten screws and stick damping plaster between connected parts
Short circuit inside the magnetic coil	During heating, the way valve has abnormal electromagnetic sound	Replace magnetic coil
Abnormal shake of compressor	Outdoor unit gives out abnormal sound	Adjust the support foot mat of compressor, tighten the bolts
Abnormal sound inside the compressor	Abnormal sound inside the compressor	If add too much refrigerant during maintenance, please reduce refrigerant properly. Replace compressor for other circumstances.

12. Exploded View and Parts List

AFH(09)DA-D3DNA1A/I AFH(12)DA-D3DNA1A/

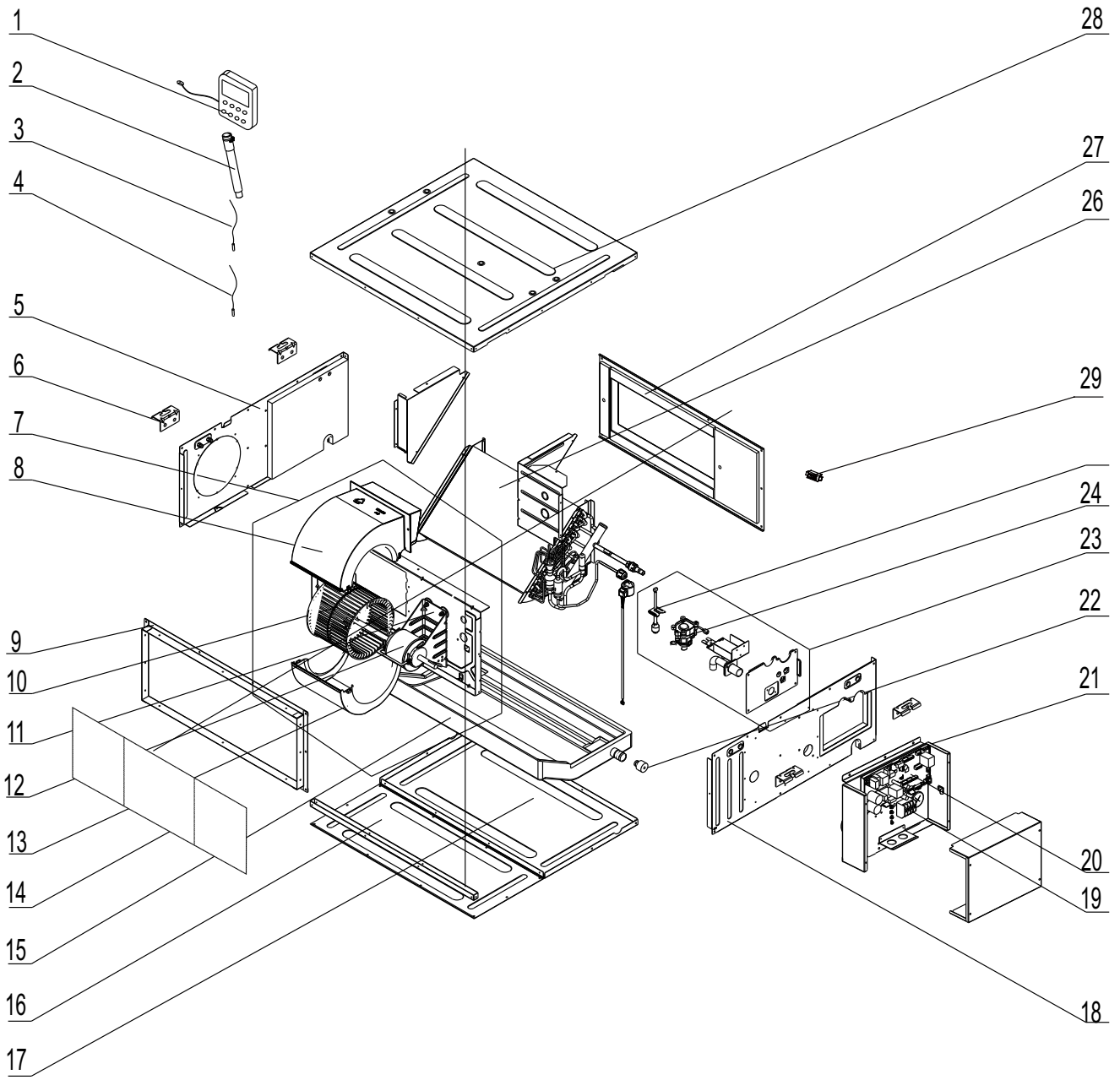

The component picture is only for reference; please refer to the actual product.

NO.	Description	Part Code		Qty
		AFH(09)DA-D3DNA1A/I	AFH(12)DA-D3DNA1A/I	
	Product Code	68644	68645	
1	Wired controlller	30564103	30564103	1
2	Drain Hose Sub-Assy	05232050	05232050	1
3	Temperature Sensor	390000592	390000592	1
4	Temperature Sensor	390000454	390000454	1
5	Right Side Plate Assy	01315200148	01315200148	1
6	Hook	02112466	02112466	4
7	Centrifugal Fan Assy	000052060068	000052060068	1
8	Propeller Housing(Upper)	26905200078	26905200078	1
9	Air IN Frame Assy	017026000004	017026000004	1
10	Centrifugal Fan	10455200003	10455200003	1
11	Supporter(Fan motor)	0180520027201	0180520027201	1
12	DC Motor	1570520000502	1570520000502	1
13	Propeller Housing(Lower)	26905200079	26905200079	1
14	Filter Sub-Assy	111001000055	111001000055	1
15	Foam Sub-assy	12505200038	12505200038	1
16	Cover Of Air-In	01265200182	01265200182	1
17	Bottom Cover Plate	01265200181	01265200181	1
18	Left Side Plate Assy	01315200147	01315200147	1
19	Terminal Board	420001000002	420001000002	1
20	Main Board	300002000879	300002000879	1
21	Electric Box Sub-Assy	0139410055601	0139410055601	1
22	Choke Plug of Drain Pipe	76815214	76815214	2
23	Seal plate Assy	01495200079	01495200079	1
24	Water Pump	43138000058	43138000058	1
25	Water Level Switch	45020216	45020216	1
26	Evaporator Assy	011001060108	011001060099	1
27	Air Outlet Frame Assy	01374100070	01374100070	1
28	Top Cover Board Assy	01264100081	01264100081	1
29	Jump	4202021901	4202021902	1

Above data is subject to change without notice.

AFH(18)DB-D3DNA1A/I AWFH(21)DB-D3DNA1A/I AFH(24)DB-D3DNA1A/I

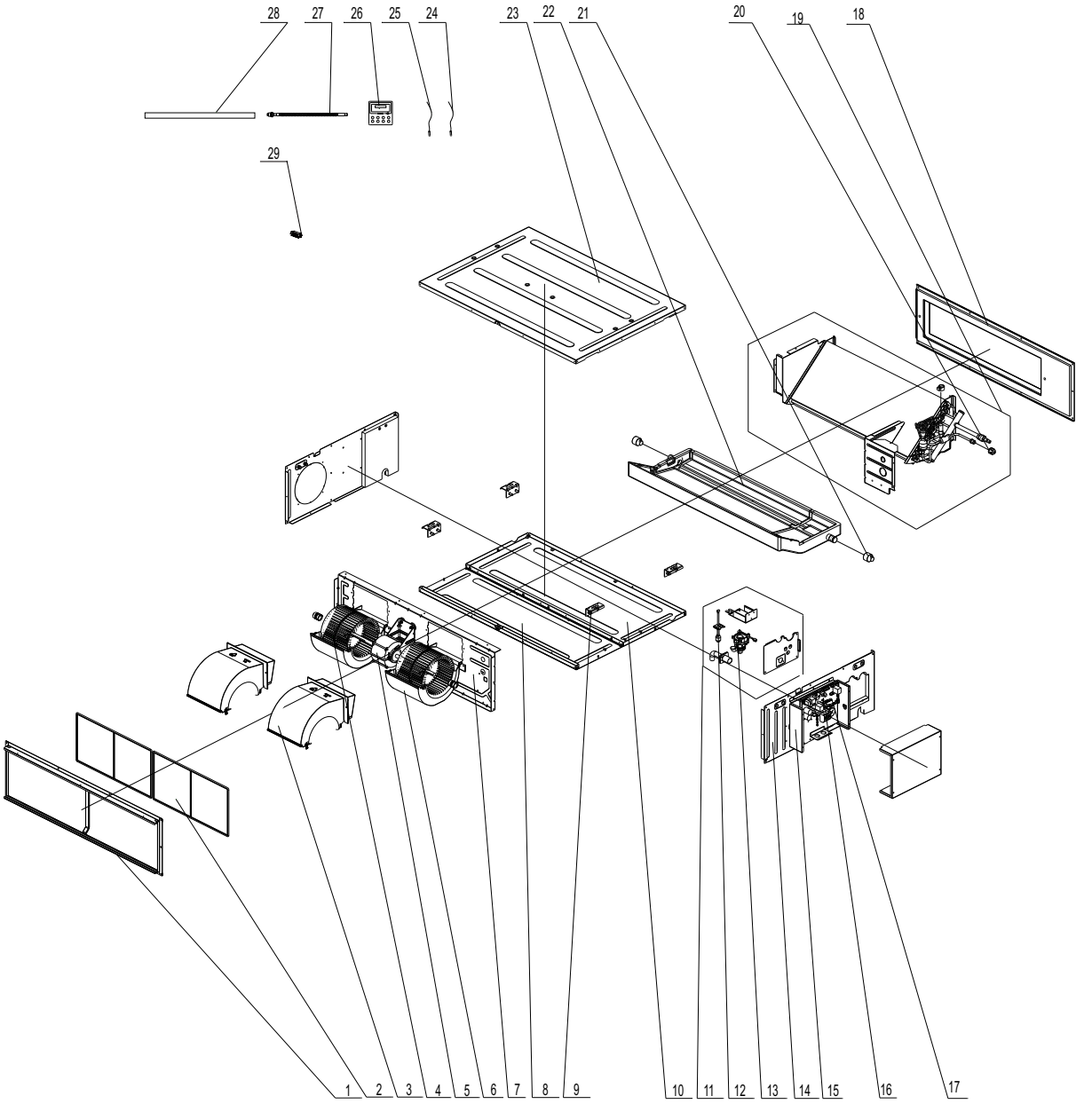

The component picture is only for reference; please refer to the actual product.

NO.	Description	Part Code			Qty
		AFH(18)DB-D3DNA1A/I	AFH(21)DB-D3DNA1A/I	AFH(24)DB-D3DNA1A/I	
	Product code	68648	68649	68646	
1	Air in Frame Assy	017026000002	017026000002	017026000002	1
2	Filter Sub-Assy	111001000045	111001000045	111001000045	1
3	Propeller Housing(Upper)	26905200078	26905200078	26905200078	1
4	Centrifugal Fan	10455200003	10455200003	10455200003	1
5	Brushless DC Motor	15705200016	15705200016	15705200016	1
6	Propeller Housing(Upper)	26905200078	26905200078	26905200078	1
7	Blower Mounting Plate Sub-Assy	01325200079	01325200079	01325200079	1
8	Cover Of Air-In	01265200132	01265200132	01265200132	3
9	Hook	02112466	02112466	02112466	1
10	Bottom Cover Plate	01265200131	01265200131	01265200131	1
11	Seal plate Assy	01495200079	01495200079	01495200079	1
12	Water Level Switch	45020216	45020216	45020216	1
13	PUMP	43138000058	43138000058	43138000058	1
14	Left Side Plate Assy	01315200147	01315200147	01315200147	1
15	Electric Box Sub-Assy	0139410055601	0139410055601	0139410055601	1
16	Terminal Board	420001000002	420001000002	420001000002	1
17	Main Board	300002000879	300002000879	300002000879	1
18	Air Outlet Frame Assy	01375200026	01375200026	01375200026	1
19	Evaporator Assy	011001060109	011001060109	011001060109	1
20	Sealing Cap(Pressure Warning)	2611219201	2611219201	2611219201	1
21	Choke Plug of Drain Pipe	76815214	76815214	76815214	1
22	Foam Sub-assy	12505200025	12505200025	12505200025	1
23	Top Cover Board Assy	01265200130	01265200130	01265200130	1
24	Temperature Sensor	390000454	390000454	390000454	1
25	Temperature Sensor	390000592	390000592	390000454	1
26	Wired controlller	30564103	30564103	30564103	1
27	Corrugated Pipe	05015408	05015408	05015408	1
28	Drain Hose Sub-Assy	05232050	05232050	05232050	1
29	Jump	4202021903	4202021904	4202021905	1

Above data is subject to change without notice.

11. Removal Procedure

09/12/18/21/24K

Motor and fan		
Precondition: The power supply has been disconnected.		
Step	Diagram	Operation Procedure
1.Remove the line connecting to the motor.	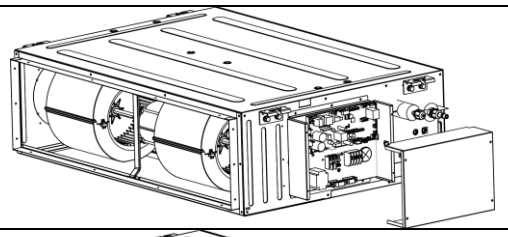	●Use a screwdriver tounscrew the electric box cover. ●Remove from the master board the line connecting to the motor and remove the tie.
2. Disassemble the seal plate and cover plate.	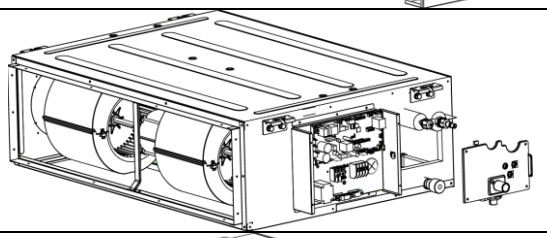	●Use a screwdriver to unscrew the seal plate and cover plate and then remove them.
3.Remove the grille	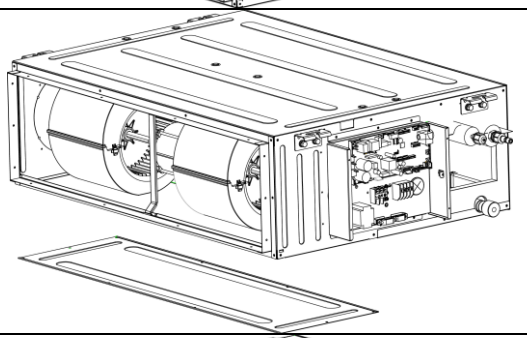	●Use a screwdriver to unscrew the cover plate component.
4. Remove the centrifugal fan.	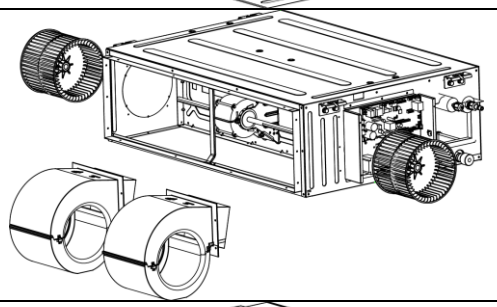	●Use a screwdriver to unscrew the front volute casing and then remove the volute casing.
5. Remove the motor.	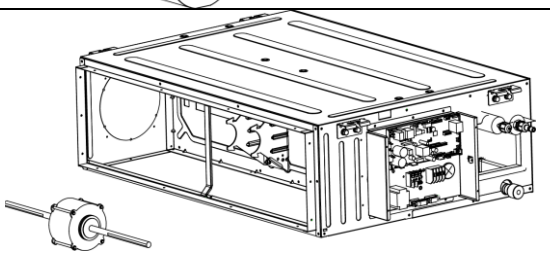	Remove the motor from the support and remove the centrifugal fan from the motor axle. Then, remove the motor. ●For motors that are accompanied with supports, the supports need removing as well.
6. Install a new motor.	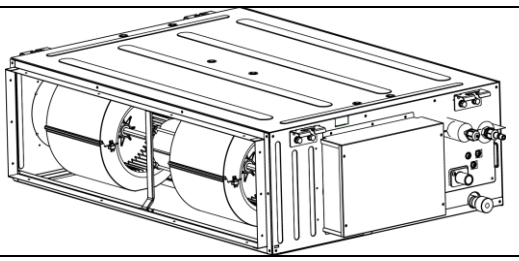	●Assemble units based on the reverse order of this procedure and power on the units for test.